Howard County
Road & Bridge

April 11, 2023

RE: Information for Bidding Howard County RFB 2023011 GAP CR 40

Dear Prospective Contractor,

Howard County Road & Bridge thanks you for your interest in our Howard County RFB 2023011. In order to bid this Project you must be prequalified with the Road & Bridge Department. After reviewing the attached plans if you are interested in bidding please contact me for the prequalification questionnaire. The questionnaire must be returned to us a minimum of 5 days before the bid is due, in order for us to review. We will be taking bids now through May 4, 2023, 10:00 A.M. Your Bid Packet and specifications will be forwarded after review of your questionnaire. If you have any questions please feel free to contact me at (432) 264-2208 or brian.klinksiek@howardcountytx.gov

Sincerely,

Brian J. Klinksiek

Brian J. Klinksiek P.E., D.R.

Invitation To Bid Howard County RFB 2023011 GAP CR 40

The Howard County Auditor will accept sealed bids until 10:00 AM on May 4, 2023. This bid requires prequalification with Howard County Road and Bridge Department, specifications may be obtained at that office, 3604 Old Colorado City Road, Big Spring, Texas 79720. The work is to supply labor, materials and equipment to pave CR 40 from FM 2230 to 1.51 miles West. Work includes traffic control, inverted prime & surface treatment.

Bids may be mailed to the Howard County Auditor, at P.O. Box 1949, Big Spring, Texas 79721-1949 or delivered to the Auditor's Office, Room 202, Howard County Courthouse. **Mark Sealed Envelope "RFB2023011"**

Bids will be presented to the Commissioner's Court at their regular meeting 3:30 PM May 8th. for their consideration. The Court reserves the right to reject any or all bids.

Jackie Olson-Howard County Auditor

NOTICE TO BIDDERS RFB 2023011

1. Bids are to be submitted on this form. Be sure to include both pages 1-2. Each bid shall be placed in an envelope, sealed and properly identified with the bid title and delivered to the County Auditor's Office before 10:00 A.M., Thursday, May 4, 2023. Late bids will not be considered under any circumstances. Mark Bids "RFB 2023011".

   This is a bid to provide materials, labor and equipment to provide a completed project to Howard County. Bidders must be prequalified through the Howard County Road & Bridge Engineer to be opened. Contact Brian Klinksiek, P.E. at (432)-264-2208 to obtain this prequalification. All item must meet 2014 TxDOT Standard Specification. **Bid Bond or Check (5% of Bid), and Payment / Performance Bonds are required**. The successful bidder will be notified within 1 business day. The County will send the bidder a contract. **Insurance coverage limits shall conform to the attached Exhibit A.**

2. Bidders attention is directed to the Texas Government Code Title 10 Chapter 2258 Prevailing wage rates. **All wage rates must meet the minimum shown on the attached Exhibit B.** To insure compliance Howard County Road & Bridge will request a random payroll from both the general contractor and sub-contractor's

3. All work shown must be completed on or before September 15, 2023. Traffic control is of the utmost importance to the safety of the traveling public. Sunday work will be only allowed with written permission from the engineer.

4. The quantities in the proposal are approximate. The quantities of work and materials may be increased or decreased as considered necessary to complete the work as planned and contemplated.

5. The County is exempt from Federal Excise Tax, State Tax and Local Tax. Do not include tax in bid. If it is determined that tax was included in the bid, it will not be included in the tabulation or any awards and will be deleted from subsequent invoices.

6. Bids cannot be altered or amended after opening time. Any alterations made before opening time must be signed by the bidder or his agent. No bid can be withdrawn after the opening time without approval of the Commissioners' Court based on reasonable acceptable reason.

7. The County will evaluate the bids and make awards for supplies, materials, services and equipment on the basis of the lowest and best bid, which meet the specifications. Awarded bid will be paid for out of current county funds.

8. The County reserves the right to accept or reject all or any part of any bid and award the bid to best serve the interest of the County.

9. By signing and executing this bid, the bidder certifies and represents to the County that bidder has not offered, conferred or agreed to confer any pecuniary benefit or other thing of value for the receipt of special treatment, advantage, information, recipient's decision, opinion, recommendation, vote or any other exercise of discretion concerning this bid.

10. Bidder further certifies and represents that bidder has not violated any State, Federal, Local Law regulations or ordinance relating to bribery, improper influence, collusion, discrimination or other similar crimes and all items or services provided or delivered under and awarded shall conform hereto.

Please initial _____

NOTICE TO BIDDERS

11. Bid unit price on quantity specified, extend and show total. In case of errors in extension, unit price shall govern.

12. Unless otherwise noted, bid prices must be firm for acceptance 60 days from opening date of bid.

13. Engineer's estimate for this project is $220,000.00

Please initial _____

DISCLOSURE OF CERTAIN RELATIONSHIPS

Effective January 1, 2006, Chapter 176 of the Texas Local Government Code requires that any vendor or person considering doing business with a local government entity disclose in the Questionnaire Form CIQ, the vendor or person's affiliation or business relationship that might cause a conflict of interest with a local government entity. By law, this questionnaire must be filed with the County Clerk of Howard County no later than the 7th business day after the date the person becomes aware of facts that require the statement to be filed. See Section 176.006, Local Government Code. A person commits an offense if the person violates Section 176.006, Local Government Code. An offense under this section is a Class C misdemeanor.

A copy of the law is available at:
https://statutes.capitol.texas.gov/Docs/LG/htm/LG.176.htm

Frequently ask questions are available at:
https://www.county.org/TAC/media/TACMedia/Legal/Legal%20Publications%20Documents/2019-Disclosure-of-Certain-Business-Relationships.pdf

The forms for reporting are available at:
https://www.ethics.state.tx.us/data/forms/conflict/CIQ.pdf

By submitting a response to this request, the vendor represents that it is in compliance with the requirements of Chapter 176 of the Texas Local Government Code.

Please turn completed forms to the Howard County Auditor's Office located at 300 Main, Room 202 Big Spring, TX or mail to P.O. Box 1949, Big Spring, TX 79721.

EXHIBIT A

A. Contractor shall, at all times during the term hereof, maintain such insurance coverage as may be required by County. All such insurance, including renewals, shall be subject to the approval of County for adequacy of protection and evidence of such coverage shall be furnished to County on Certificates of Insurance indicating such insurance to be in force and effect and providing that it will not be canceled during the performance of Work under this Agreement without thirty (30) calendar days prior written notice to County. Completed Certificates of Insurance shall be filed with County prior to the performance of services hereunder, provided however, that Contractor shall at any time upon request, file duplicate copies of the policies of such insurance with County.

B. If in the judgment of County, prevailing conditions warrant the provision by Contractor of additional liability insurance coverage or coverage which is different in kind, County reserves the right to require the provision by Contractor of an amount of coverage different from the amounts or kind previously required and shall afford written notice of such change in requirements thirty (30) days prior to the date on which the requirements shall take effect. Should the Contractor fail or refuse to satisfy the requirement of changed coverage within thirty (30) days following County's written notice, this Agreement shall be considered terminated on the date that the required change in policy coverage would otherwise take effect.

General Conditions

The following condition shall apply to all insurance policies obtained by Contractor for the purpose of complying with this Agreement:

1) Named Insureds: All insurance policies required herein shall be drawn in the name of Contractor, with County, its council members, board and commission members, officials, agents, guests, invitees, consultants and employees named as additional insureds, except on Workers' Compensation coverage.

2) Waiver of Subrogation: Contractor shall require its insurance carrier(s), with respect to all insurance policies, to waive all rights of subrogation against County, its council members, board and commission members, officials, agents, guests, invitees, consultants and employees.

3) Certificates of Insurance: At or before the time of execution of this Agreement,

Contractor shall furnish County's Risk Manager with certificates of insurance as evidence that all of the policies required herein are in full force and effect and provide the required coverage and limits of insurance. All certificates of insurance shall clearly state that all applicable requirements have been satisfied. The certificates shall provide that any company issuing an insurance policy shall provide to County not less than thirty (30) days advance notice in writing of cancellation, non-renewal, or material change in the policy of insurance. In addition, Contractor and insurance company shall immediately provide written notice to County's Risk Manager upon receipt of notice of cancellation of any insurance policy, or of a decision to terminate or alter any insurance policy. Certificates of insurance and notices of cancellations, terminations, or alterations shall be furnished to:
County Engineer at 3604 Old Colorado City Rd, Big Spring Texas 79720.

4) Contractor's Liability: The procurement of such policy of insurance shall not be construed to be a limitation upon Contractor's liability or as a full performance on its part of the indemnification provisions of this Agreement. Contractor's obligations are, notwithstanding any policy of insurance, for the full and total amount 6f any damage, injury, or loss caused by or attributable to its activities conducted at or upon the premises. Failure of Contractor to maintain adequate coverage shall not relieve Contractor of any contractual responsibility or obligation.

5) Subcontractors' Insurance: Contractor shall cause each Subcontractor and Sub-Sub-Contractor of Contractor to purchase and maintain insurance of the types and in the amounts specified below. Contractor shall require Subcontractors and Sub- Subcontractors to furnish copies of certificates of insurance to the County Engineer evidencing coverage for each Subcontractor and Sub-Subcontractor.

Types And Amounts Of Insurance Required

Contractor shall obtain and continuously maintain in effect at all times during the term hereof, at Contractor's sole expense, insurance coverage as follows with limits not less than those set forth below:

1) Commercial General Liability: This policy shall be occurrence-type policy and shall protect Contractor and additional insureds against all claims arising from bodily injury, sickness, disease or death of any person (other than Contractor's employees) and damage to property of County or others arising out of the act or omission of Contractor or its agents and employees. This policy shall include completed operations, products liability, contractual coverage, broad form property coverage, explosion, collapse, underground, premises/operations, and independent contractors (to remain in force for two years after final payment). Coverage limits shall not be less than:

   $1,000,000.00 General Aggregate
   $1,000,000.00 Products Completed Operations
   $1,000,000.00 Personal & Advertising Injury
   $1,000,000.00 Each Occurrence
   $ 100,000.00 Fire Damage (Any one Fire)

2) Business Automobile Liability: This policy shall protect Contractor and the additional insureds against all claims for injuries to members of the public and damage to property of others arising from the use of motor vehicles and shall cover operation on and off the premises of all motor vehicles licensed for highway use, whether they are owned, non-owned or hired. Coverage limits shall not be less than:

   $1,000,000.00 Combined Single Limit

3) Workers' Compensation and Employer's Liability: If Contractor hires any employees, Contractor shall maintain Workers' Compensation and Employer's Liability insurance, which shall protect Contractor against all claims under applicable state workers' compensation laws and employer's liability. The insured shall also be protected against claim for injury, disease or death of employees which for any reason, may not fall within the provisions of a workers' compensation law. Coverage shall not be less than:

Statutory Amount	Workers' Compensation
$ 500,000.00	Employer's Liability, Each Accident Employer's
$ 500,000.00	Liability, Disease - Each Employee Employer's
$ 500,000.00	Liability, Disease - Policy Limit

Texas Department of Transportation

The wage rates listed herein are those predetermined by the Secretary of Labor and State Statue and listed in the United States Department of Labor's (USDOL) General Decisions dated **01-01-2021** and are the minimum wages to be paid accordingly for each specified classification. To determine the applicable wage rate zone, a list entitled "TEXAS COUNTIES IDENTIFIED BY WAGE RATE ZONES" is provided in the contract. Any wage rate that is not listed herein and not in the USDOL's general decision, must be submitted to the Engineer for approval. IMPORTANT NOTICE FOR STATE PROJECTS: only the controlling wage rate zone applies to the contract. Effective 01-01-2021.

CLASS. #	CLASSIFICATION DESCRIPTION	ZONE TX02 *(TX20210002)	ZONE TX03 *(TX20210003)	ZONE TX04 *(TX20210004)	ZONE TX05 *(TX20210005)	ZONE TX06 *(TX20210006)	ZONE TX07 *(TX20210007)	ZONE TX08 *(TX20210008)	ZONE TX24 *(TX20210024)	ZONE TX25 *(TX20210025)	ZONE TX27 *(TX20210027)	ZONE TX28 *(TX20210028)	ZONE TX29 *(TX20210029)	ZONE TX30 *(TX202210030)	ZONE TX37 *(TX20210037)	ZONE TX38 *(TX20210038)	ZONE TX42 *(TX20210042)
1428	Agricultural Tractor Operator						$12.69					$12.35			$11.75		
1300	Asphalt Distributor Operator	$14.87	$13.48	$13.88	$15.72	$15.58	$15.55	$15.72	$13.28	$15.32	$15.62	$14.36	$14.25	$14.03	$13.75	$14.06	$14.40
1303	Asphalt Paving Machine Operator	$13.40	$12.25	$12.35	$13.87	$14.05	$14.36	$14.20	$13.26	$13.99	$14.68	$12.92	$13.44	$12.53	$14.00	$14.32	$12.99
1106	Asphalt Raker	$12.28	$10.61	$12.02	$14.21	$11.65	$12.12	$11.64	$11.44	$12.69	$12.05	$11.34	$11.67	$11.40	$12.59	$12.36	$11.78
1112	Batching Plant Operator, Asphalt																
1115	Batching Plant Operator, Concrete																
1214	Blaster																
1615	Boom Truck Operator						$18.36										
1444	Boring Machine Operator																
1305	Broom or Sweeper Operator	$11.21	$10.33	$10.08	$11.99		$11.04	$11.62		$11.74	$11.41	$10.30		$10.23	$10.60	$12.68	$11.05
1144	Communications Cable Installer																
1124	Concrete Finisher, Paving and Structures	$13.55	$12.46	$13.16	$12.85	$12.64	$12.56	$12.77	$12.44	$14.12	$13.04	$13.38	$12.64	$12.80	$12.79	$12.98	$13.32
1318	Concrete Pavement Finishing Machine Operator				$16.05		$15.48			$16.05		$19.31				$13.07	
1315	Concrete Paving, Curing, Float, Texturing Machine Operator											$16.34				$11.71	
1333	Concrete Saw Operator				$14.67					$14.48	$17.33					$13.99	
1399	Concrete/Gunite Pump Operator																
1344	Crane Operator, Hydraulic 80 tons or less				$18.22		$18.36			$18.12	$18.04	$20.21			$18.63	$13.86	
1345	Crane Operator, Hydraulic Over 80 Tons																
1342	Crane Operator, Lattice Boom 80 Tons or Less	$16.82	$14.39	$13.85	$17.27		$15.87			$17.27		$14.67			$16.42	$14.97	$13.87
1343	Crane Operator, Lattice Boom Over 80 Tons				$20.52		$19.38			$20.52		$17.49			$25.13	$15.80	
1306	Crawler Tractor Operator	$13.96	$16.63	$13.62	$14.26		$15.67			$14.07	$13.15	$13.38			$14.60	$13.68	$13.50
1351	Crusher or Screen Plant Operator																
1446	Directional Drilling Locator						$11.67										
1445	Directional Drilling Operator				$20.32		$17.24										
1139	Electrician	$20.96		$19.87	$19.80		$26.35		$20.27	$19.80		$20.92				$27.11	$19.87
1347	Excavator Operator, 50,000 pounds or less	$13.46	$12.56	$13.67	$17.19		$12.88	$14.38	$13.49	$17.19		$13.88			$14.09	$12.71	$14.42
1348	Excavator Operator, Over 50,000 pounds		$15.23	$13.52	$17.04		$17.71			$16.99	$18.80	$16.22				$14.53	$13.52
1150	Flagger	$9.30	$9.10	$8.50	$10.28	$8.81	$9.45	$8.70		$10.06	$9.71	$9.03	$8.81	$9.08	$9.90	$10.33	$8.10
1151	Form Builder/Setter, Structures	$13.52	$12.30	$13.38	$12.91	$12.71	$12.87	$12.38	$12.26	$13.84	$12.98	$13.07	$13.61	$12.82	$14.73	$12.23	$12.25
1160	Form Setter, Paving & Curb	$12.36	$12.16	$13.93	$11.83	$10.71	$12.94			$13.16	$12.54	$11.33	$10.69		$13.33	$12.34	$13.93
1360	Foundation Drill Operator, Crawler Mounted				$17.99					$17.99						$17.43	
1363	Foundation Drill Operator, Truck Mounted		$16.86	$22.05	$21.51		$16.93			$21.07	$20.20	$20.76		$17.54	$21.39	$15.89	$22.05
1369	Front End Loader Operator, 3 CY or Less	$12.28	$13.49	$13.40	$13.85		$13.04	$13.15	$13.29	$13.69	$12.64	$12.89			$13.51	$13.32	$12.17
1372	Front End Loader Operator, Over 3 CY	$12.77	$13.69	$12.33	$14.96		$13.21	$12.86	$13.57	$14.72	$13.75	$12.32			$13.19	$13.17	$13.02
1329	Joint Sealer																
1172	Laborer, Common	$10.30	$9.86	$10.08	$10.51	$10.71	$10.50	$10.24	$10.58	$10.72	$10.45	$10.30	$10.25	$10.03	$10.54	$11.02	$10.15
1175	Laborer, Utility	$11.80	$11.53	$12.70	$12.17	$11.81	$12.27	$12.11	$11.33	$12.32	$11.80	$11.53	$11.23	$11.50	$11.95	$11.73	$12.37

CLASS. #	CLASSIFICATION DESCRIPTION	ZONE TX02 *(TX20210002)	ZONE TX03 *(TX20210003)	ZONE TX04 *(TX20210004)	ZONE TX05 *(TX20210005)	ZONE TX06 *(TX20210006)	ZONE TX07 *(TX20210007)	ZONE TX08 *(TX20210008)	ZONE TX24 *(TX20210024)	ZONE TX25 *(TX20210025)	ZONE TX27 *(TX20210027)	ZONE TX28 *(TX20210028)	ZONE TX29 *(TX20210029)	ZONE TX30 *(TX202210030)	ZONE TX37 *(TX20210037)	ZONE TX38 *(TX20210038)	ZONE TX42 *(TX20210042)
1346	Loader/Backhoe Operator	$14.18	$12.77	$12.97	$15.68		$14.12			$15.18	$13.58	$12.87		$13.21	$14.13	$14.29	$12.90
1187	Mechanic	$20.14	$15.47	$17.47	$17.74	$17.00	$17.10			$17.68	$18.94	$18.58	$17.00	$16.61	$18.46	$16.96	$17.47
1380	Milling Machine Operator	$15.54	$14.64	$12.22	$14.29		$14.18			$14.32	$14.35	$12.86			$14.75	$13.53	$12.80
1390	Motor Grader Operator, Fine Grade	$17.49	$16.52	$16.88	$17.12	$18.37	$18.51	$16.69	$16.13	$17.19	$18.35	$17.07	$17.74	$17.47	$17.08	$15.69	$20.01
1393	Motor Grader Operator, Rough	$16.15	$14.62	$15.83	$16.20	$17.07	$14.63	$18.50		$16.02	$16.44	$15.12	$16.85	$14.47	$17.39	$14.23	$15.53
1413	Off Road Hauler			$10.08	$12.26		$11.88			$12.25		$12.23			$13.00	$14.60	
1196	Painter, Structures					$21.29	$18.34						$21.29			$18.62	
1396	Pavement Marking Machine Operator	$16.42		$13.10	$13.55		$19.17	$12.01		$13.63	$14.60	$13.17		$16.65	$10.54	$11.18	$13.10
1443	Percussion or Rotary Drill Operator																
1202	Piledriver															$14.95	
1205	Pipelayer		$11.87	$14.64	$13.17	$11.17	$12.79		$11.37	$13.24	$12.66	$13.24	$11.17	$11.67		$12.12	$14.64
1384	Reclaimer/Pulverizer Operator	$12.85			$11.90		$12.88			$11.01		$10.46					
1500	Reinforcing Steel Worker	$13.50	$14.07	$17.53	$16.17		$14.00			$16.18	$12.74	$15.83		$17.10		$15.15	$17.72
1402	Roller Operator, Asphalt	$10.95		$11.96	$13.29		$12.78	$11.61		$13.08	$12.36	$11.68			$11.71	$11.95	$11.50
1405	Roller Operator, Other	$10.36		$10.44	$11.82		$10.50	$11.64		$11.51	$10.59	$10.30		$12.04	$12.85	$11.57	$10.66
1411	Scraper Operator	$10.61	$11.07	$10.85	$12.88		$12.27		$11.12	$12.96	$11.88	$12.43		$11.22	$13.95	$13.47	$10.89
1417	Self-Propelled Hammer Operator																
1194	Servicer	$13.98	$12.34	$14.11	$14.74		$14.51	$15.56	$13.44	$14.58	$14.31	$13.83		$12.43	$13.72	$13.97	$14.11
1513	Sign Erector																
1708	Slurry Seal or Micro-Surfacing Machine Operator																
1341	Small Slipform Machine Operator									$15.96							
1515	Spreader Box Operator	$12.60		$13.12	$14.71		$14.04			$14.73	$13.84	$13.68		$13.45	$11.83	$13.58	$14.05
1705	Structural Steel Welder															$12.85	
1509	Structural Steel Worker						$19.29									$14.39	
1339	Subgrade Trimmer																
1143	Telecommunication Technician																
1145	Traffic Signal/Light Pole Worker						$16.00										
1440	Trenching Machine Operator, Heavy						$18.48										
1437	Trenching Machine Operator, Light																
1609	Truck Driver Lowboy-Float	$14.46	$13.63	$13.41	$15.00	$15.93	$15.66			$16.24	$16.39	$14.30	$16.62	$15.63	$14.28	$16.03	$13.41
1612	Truck Driver Transit-Mix				$14.14					$14.14							
1600	Truck Driver, Single Axle	$12.74	$10.82	$10.75	$13.04	$11.61	$11.79	$13.53	$13.16	$12.31	$13.40	$10.30	$11.61		$11.97	$11.46	$10.75
1606	Truck Driver, Single or Tandem Axle Dump Truck	$11.33	$14.53	$11.95	$12.95		$11.68		$14.06	$12.62	$11.45	$12.28		$13.08	$11.68	$11.48	$11.10
1607	Truck Driver, Tandem Axle Tractor with Semi Trailer	$12.49	$12.12	$12.50	$13.42		$12.81	$13.16		$12.86	$16.22	$12.50			$13.80	$12.27	$12.50
1441	Tunneling Machine Operator, Heavy																
1442	Tunneling Machine Operator, Light																
1706	Welder		$14.02		$14.86		$15.97		$13.74	$14.84					$13.78		
1520	Work Zone Barricade Servicer	$10.30	$12.88	$11.46	$11.70	$11.57	$11.85	$10.77		$11.68	$12.20	$11.22	$11.51	$12.96	$10.54	$11.67	$11.76

Notes:

*Represents the USDOL wage decision.

Any worker employed on this project shall be paid at the rate of one and one half (1-1/2) times the regular rate for every hour worked in excess of forty (40) hours per week.

For reference, the titles and descriptions for the classifications listed here are detailed further in the AGC of Texas' *Standard Job Classifications and Descriptions for Highway, Heavy, Utilities, and Industrial Construction in Texas* posted on the AGC's Web site for any contractor.

TEXAS COUNTIES IDENTIFIED BY
WAGE RATE ZONES: 2, 3, 4, 5, 6, 7, 8, 24, 25, 27, 28, 29, 30, 37, 38, 42

County Name	Zone	County Name	Zone	County Name	Zone	County Name	Zone
Anderson	28	Donley	37	Karnes	27	Reagan	37
Andrews	37	Duval	30	Kaufman	25	Real	37
Angelina	28	Eastland	37	Kendall	7	Red River	28
Aransas	29	Ector	2	Kenedy	30	Reeves	8
Archer	25	Edwards	8	Kent	37	Refugio	27
Armstrong	2	El Paso	24	Kerr	27	Roberts	37
Atascosa	7	Ellis	25	Kimble	37	Robertson	7
Austin	38	Erath	28	King	37	Rockwall	25
Bailey	37	Falls	28	Kinney	8	Runnels	37
Bandera	7	Fannin	28	Kleberg	27	Rusk	4
Bastrop	7	Fayette	27	Knox	37	Sabine	28
Baylor	37	Fisher	37	Lamar	28	San Augustine	28
Bee	27	Floyd	37	Lamb	37	San Jacinto	38
Bell	7	Foard	37	Lampasas	7	San Patricio	29
Bexar	7	Fort Bend	38	LaSalle	30	San Saba	37
Blanco	27	Franklin	28	Lavaca	27	Schleicher	37
Borden	37	Freestone	28	Lee	27	Scurry	37
Bosque	28	Frio	27	Leon	28	Shackelford	37
Bowie	4	Gaines	37	Liberty	38	Shelby	28
Brazoria	38	Galveston	38	Limestone	28	Sherman	37
Brazos	7	Garza	37	Lipscomb	37	Smith	4
Brewster	8	Gillespie	27	Live Oak	27	Somervell	28
Briscoe	37	Glasscock	37	Llano	27	Starr	30
Brooks	30	Goliad	29	Loving	37	Stephens	37
Brown	37	Gonzales	27	Lubbock	2	Sterling	37
Burleson	7	Gray	37	Lynn	37	Stonewall	37
Burnet	27	Grayson	25	Madison	28	Sutton	8
Caldwell	7	Gregg	4	Marion	28	Swisher	37
Calhoun	29	Grimes	28	Martin	37	Tarrant	25
Callahan	25	Guadalupe	7	Mason	27	Taylor	2
Cameron	3	Hale	37	Matagorda	27	Terrell	8
Camp	28	Hall	37	Maverick	30	Terry	37
Carson	2	Hamilton	28	McCulloch	37	Throckmorton	37
Cass	28	Hansford	37	McLennan	7	Titus	28
Castro	37	Hardeman	37	McMullen	30	Tom Green	2
Chambers	38	Hardin	38	Medina	7	Travis	7
Cherokee	28	Harris	38	Menard	37	Trinity	28
Childress	37	Harrison	42	Midland	2	Tyler	28
Clay	25	Hartley	37	Milam	28	Upshur	4
Cochran	37	Haskell	37	Mills	37	Upton	37
Coke	37	Hays	7	Mitchell	37	Uvalde	30
Coleman	37	Hemphill	37	Montague	37	Val Verde	8
Collin	25	Henderson	28	Montgomery	38	Van Zandt	28
Collingsworth	37	Hidalgo	3	Moore	37	Victoria	6
Colorado	27	Hill	28	Morris	28	Walker	28
Comal	7	Hockley	37	Motley	37	Waller	38
Comanche	37	Hood	28	Nacogdoches	28	Ward	37
Concho	37	Hopkins	28	Navarro	28	Washington	28
Cooke	37	Houston	28	Newton	28	Webb	3
Coryell	7	Howard	37	Nolan	37	Wharton	27
Cottle	37	Hudspeth	8	Nueces	29	Wheeler	37
Crane	37	Hunt	25	Ochiltree	37	Wichita	5
Crockett	8	Hutchinson	37	Oldham	37	Wilbarger	37
Crosby	2	Irion	2	Orange	38	Willacy	30
Culberson	8	Jack	28	Palo Pinto	28	Williamson	7
Dallam	37	Jackson	27	Panola	28	Wilson	7
Dallas	25	Jasper	28	Parker	25	Winkler	37
Dawson	37	Jeff Davis	8	Parmer	37	Wise	25
Deaf Smith	37	Jefferson	38	Pecos	8	Wood	28
Delta	25	Jim Hogg	30	Polk	28	Yoakum	37
Denton	25	Jim Wells	27	Potter	2	Young	37
DeWitt	27	Johnson	25	Presidio	8	Zapata	30
Dickens	37	Jones	25	Rains	28	Zavala	30
Dimmit	30			Randall	2		

HOWARD COUNTY
ROAD & BRIDGE DEPARTMENT

PLANS OF PROPOSED
COUNTY ROAD IMPROVEME

Project 2023011

For the Paving of CR 40 From FM 2230 To 1.5 mil

Consisting of inverted prime, 1 course surface treatment, and

Project Length: 7,954 Feet
Project Length: 1.51 Miles

1 ---------- Title Sheet
2 ---------- General Notes
3 ---------- Estimated Quantities & Details
4 ---------- Project Layout
5-16 ---------- BC (1)-21 Through BC (12)-21 *
17 ---------- TCP (SC-1) - 21 *

The standard sheets specifically identified above with an (*) have been selected by me or under my responsible supervision as being applicable to this project.

Brian J. Klinksiek, P.E.
Brian J. Klinksiek

3/29/2023
Date

STATE OF TEXAS
BRIAN J. KLINKSIEK
96664
LICENSED
PROFESSIONAL ENGINEER

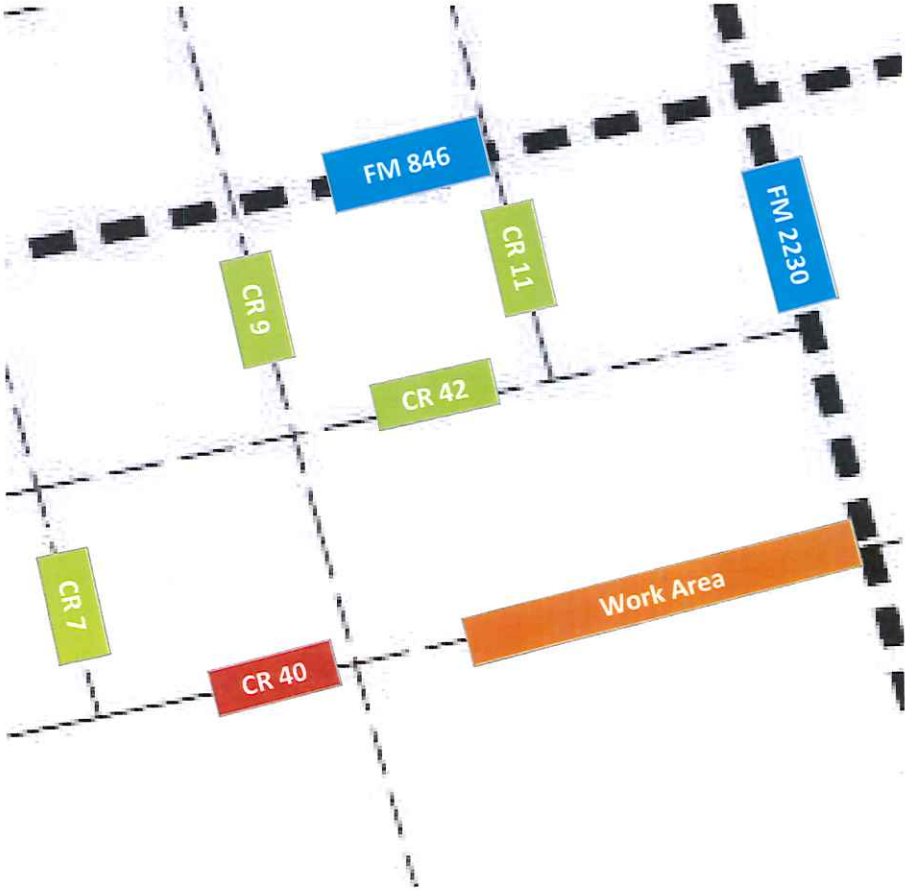

General Notes

All pages of the bid package must be initialed or signed as indicated for a bid to be considered complete. This package has 3 pages

All Items reference the Texas Department of Transportation 2014 English Specification Book

Bids will be opened at **10:00 AM May 4,2023** in the Howard County Auditor's Office. Final acceptance of bids will made be during the regular session of Howard County Commissioner's Court at **3:30 PM May 8,2023**.

In order to qualify to have a bid read the contractor must prove that they have the knowledge and capability to perform the work described herein. Provide the Howard County Road & Bridge (HC R&B) Engineer with a list of personnel, their experience, and references from recent jobs. Traffic control is of the utmost importance for the safety of the traveling public of Howard County. Documentation on traffic control certifications must also be provided. The Engineer will supply to the Auditor a list of all contractors meeting the qualification process before the bid opening. If a contractor has worked for Howard County Road & Bridge within the last 8 years they may request placement on the list based solely on their previous work without the need for documentation.

Delineate stockpiles located in the right of way with 42" cones at 75 foot on center or as approved in writing by the Engineer. Failure to meet this requirement will impact payment of Material on Hand. Stockpiles should maintain a 7 foot clear zone from the edge of pavement. Stockpile placed on TxDOT right of way must conform to the Abilene district stockpile procedure to qualify for payment of Material on hand.

The Engineer has secured stockpile locations and will assist the contractor in locating these locations. These locations are noted on the plans. If the Contractor sees the need for additional stockpile locations the Engineer is willing to assist in locating and securing additional sites. The Contractor is not limited to these locations and may find their own alternate locations. Howard County is not responsible for cleaning these locations and any material left there must be delivered to the Howard County Road & Bridge Yard in Big Spring prior to final payment being made

A Preconstruction conference shall be held at the Howard County Road & Bridge Office, located at 3604 Old Colorado City Road, in order to establish starting date and location. A written notice to proceed will be given at this conference and work may then commence.

Payment for Material on Hand will be allowed. Contractor must submit the supplier's invoice to the Road & Bridge Engineer's office. Road & Bridge will verify quantity in place within Howard County and check for proper traffic control before submitting the invoice to be paid. Materials so submitted and paid become the property of Howard County.

Unless authorized in writing by the Howard County Road & Bridge Engineer, the open season for the application of asphalt is May 1 to September 15. Sunday work will only be allowed with written permission from the engineer.

Unless authorized in writing by the Howard County Road & Bridge Engineer, the open season for the application of inverted prime is September 20 to May 15. Sunday work will only be allowed with written permission from the engineer.

Item 310-9000 RC 250, GR-5 IN
Aggregate will confor
130 SY/CY. Adjustme

Asphalt will conform
Adjustment may be n

Item 316-6005 SEALCOAT COU
Aggregate will confc
SY/CY. Adjustment i

Asphalt will conform
application rate will
Engineer

Item 502-6025 BARR, SIGNS, &
Lump Sum may be n
50% For Item
50% For Item

Failure to up keep s

Engineer's Estimate:
Howard County Roa

Road	Start	Stop	Length	Width	Widen SY
CR 40	FM 2230	1.5 Miles West	7954	24	

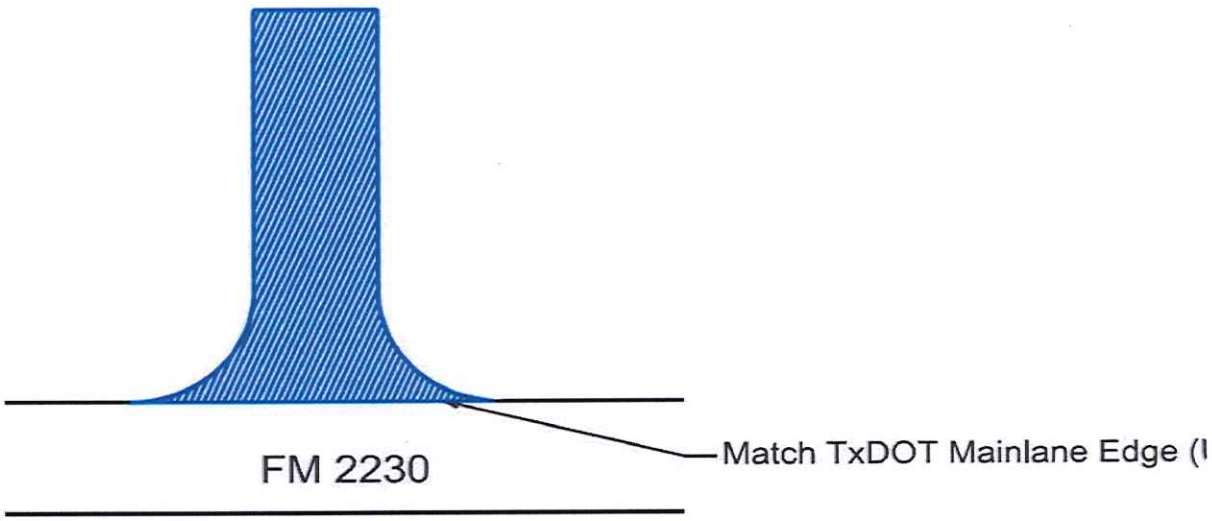

Typical TxDOT Intersection Detail

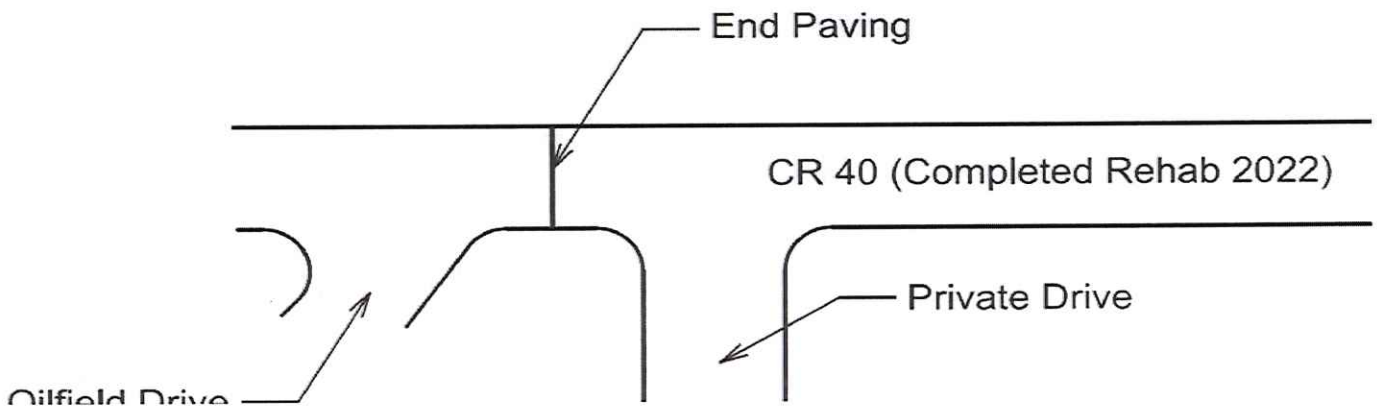

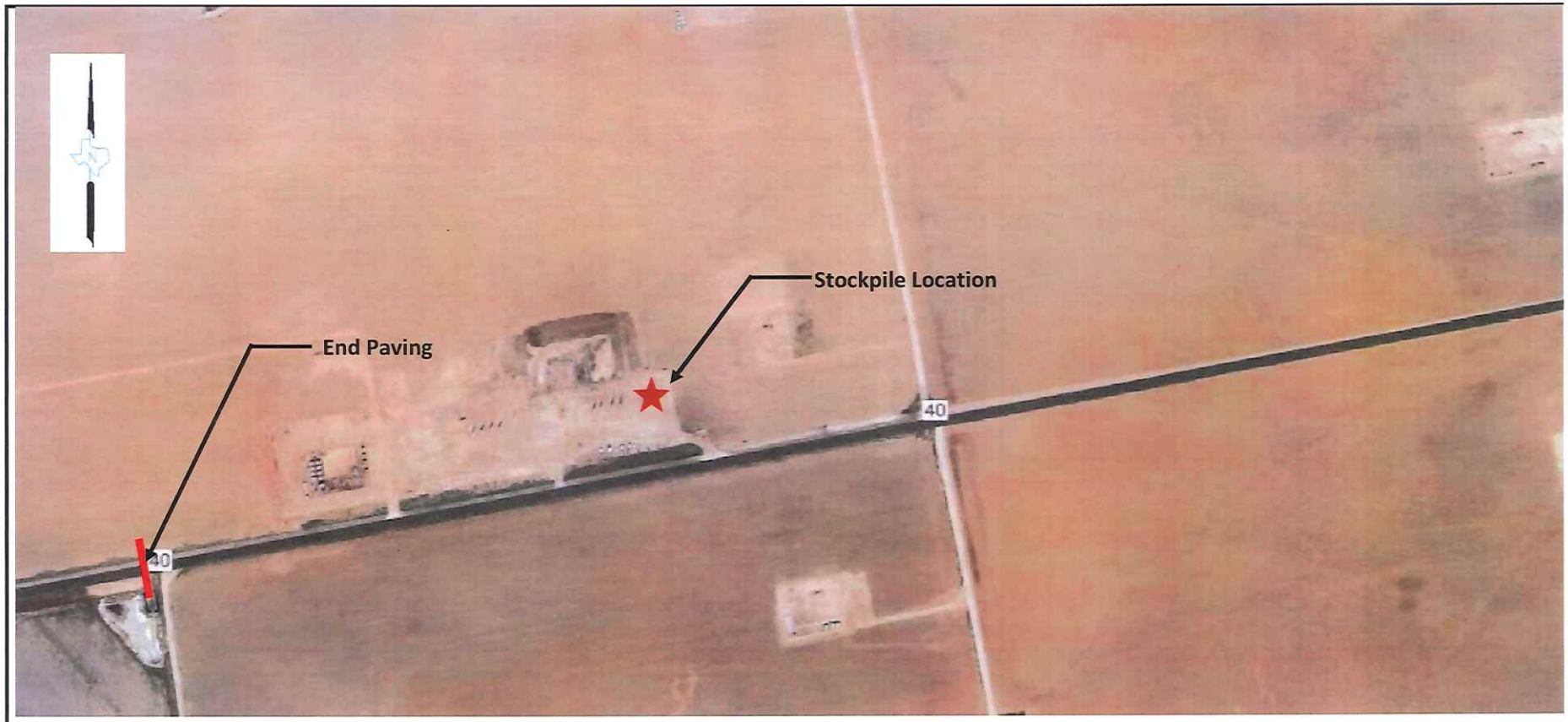
Stockpile Location
End Paving
40
40

DISCLAIMER:
The use of this standard is governed by the "Texas Engineering Practice Act". No warranty of any kind is made by TxDOT for any purpose whatsoever. TxDOT assumes no responsibility for the conversion of this standard to other formats or for incorrect results or damages resulting from its use.

BARRICADE AND CONSTRUCTION (BC) STANDARD SHEETS GENERAL NOTES:

1. The Barricade and Construction Standard Sheets (BC sheets) are intended to show typical examples for placement of temporary traffic control devices, construction pavement markings, and typical work zone signs. The information contained in these sheets meet or exceed the requirements shown in the "Texas Manual on Uniform Traffic Control Devices" (TMUTCD).

2. The development and design of the Traffic Control Plan (TCP) is the responsibility of the Engineer.

3. The Contractor may propose changes to the TCP that are signed and sealed by a licensed professional engineer for approval. The Engineer may develop, sign and seal Contractor proposed changes.

4. The Contractor is responsible for installing and maintaining the traffic control devices as shown in the plans. The Contractor may not move or change the approximate location of any device without the approval of the Engineer.

5. Geometric design of lane shifts and detours should, when possible, meet the applicable design criteria contained in manuals such as the American Association of State Highway and Transportation Officials (AASHTO), "A Policy on Geometric Design of Highways and Streets," the TxDOT "Roadway Design Manual" or engineering judgment.

6. When projects abut, the Engineer(s) may omit the END ROAD WORK, TRAFFIC FINES DOUBLE, and other advance warning signs if the signing would be redundant and the work areas appear continuous to the motorists. If the adjacent project is completed first, the Contractor shall erect the necessary warning signs as shown on these sheets, the TCP sheets or as directed by the Engineer. The BEGIN ROAD WORK NEXT X MILES sign shall be revised to show appropriate work zone distance.

7. The Engineer may require duplicate warning signs on the median side of divided highways where median width will permit and traffic volumes justify the signing.

8. All signs shall be constructed in accordance with the details found in the "Standard Highway Sign Designs for Texas," latest edition. Sign details not shown in this manual shall be shown in the plans or the Engineer shall provide a detail to the Contractor before the sign is manufactured.

9. The temporary traffic control devices shown in the illustrations of the BC sheets are examples. As necessary, the Engineer will determine the most appropriate traffic control devices to be used.

10. Where highway construction or maintenance work is being undertaken, other than mobile operations as defined by the Texas Manual on Uniform Traffic Control Devices, CSJ limit signs are required. CSJ limit signs are shown on BC(2). The OBEY WARNING SIGNS STATE LAW sign, STAY ALERT TALK OR TEXT LATER and the WORK ZONE TRAFFIC FINES DOUBLE sign with plaque shall be erected in advance of the CSJ limits. The BEGIN ROAD WORK NEXT X MILES, CONTRACTOR and END ROAD WORK signs shall be erected at or near the CSJ limits. For mobile operations, CSJ limit signs are not required.

11. Traffic control devices should be in place only while work is actually in progress or a definite need exists.

12. The Engineer has the final decision on the location of all traffic control

WORKER SAFETY NOTES:

1. Workers on foot who are expose
within the right-of-way shall
the requirements of ISEA "Amer
Apparel," or equivalent revisi
performance for Class 2 or 3 r
considered for high traffic vo

2. Except in emergency situations
when flagging is used at night

COMPLIANT WORKZONE TRAFFI

1. Only pre-qualified products sh
Traffic Control Devices List"
and their sources.

2. Work zone traffic control dev
Assessing safety Hardware (MA

THE DOCUMENTS BE
htt
COMPLIANT WORK ZONE TRA
DEPARTMENTAL MATERIAL S
MATERIAL PRODUCER LIST
ROADWAY DESIGN MANUAL -
STANDARD HIGHWAY SIGN D
TEXAS MANUAL ON UNIFORM
TRAFFIC ENGINEERING STA

DISCLAIMER:
The use of this standard is governed by the "Texas Engineering Practice Act". No warranty of any kind is made by TxDOT for any purpose whatsoever. TxDOT assumes no responsibility for the conversion of this standard to other formats or for incorrect results or damages resulting from its use.

TYPICAL LOCATION OF CROSSROAD SIGNS

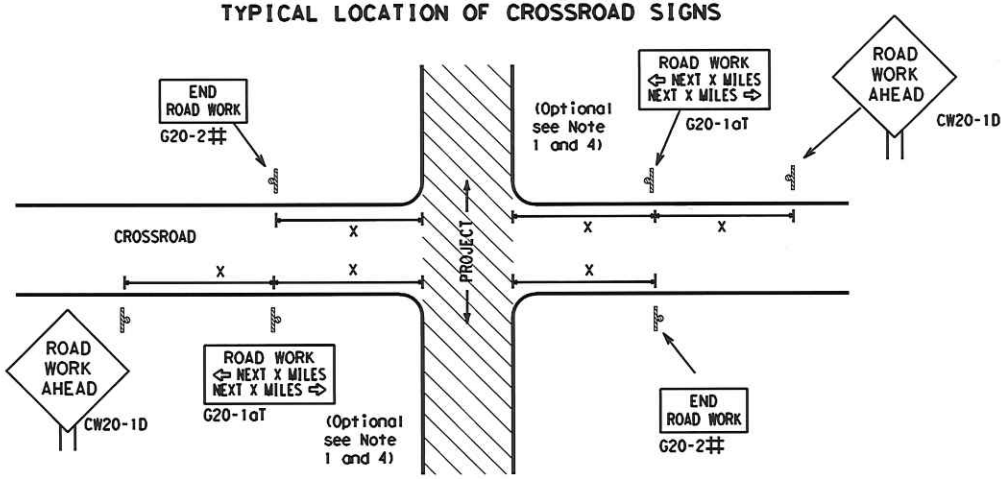

May be mounted on back of "ROAD WORK AHEAD" (CW20-1D) sign with approval of Engineer. (See note 2 below)

1. The typical minimum signing on a crossroad approach should be a "ROAD WORK AHEAD" (CW20-1D) sign and a (G20-2) "END ROAD WORK" sign, unless noted otherwise in plans.
2. The Engineer may use the reduced size 36" x 36" ROAD WORK AHEAD (CW20-1D) sign mounted back to back with the reduced size 36" x 18" "END ROAD WORK" (G20-2) sign on low volume crossroads (see Note 4 under "Typical Construction Warning Sign Size and Spacing"). See the "Standard Highway Sign Designs for Texas" manual for sign details. The Engineer may omit the advance warning signs on low volume crossroads. The Engineer will determine whether a road is low volume as per TMUTCD Part 5. This information shall be shown in the plans.
3. Based on existing field conditions, the Engineer/Inspector may require additional signs such as FLAGGER AHEAD, LOOSE GRAVEL, or other appropriate signs. When additional signs are required, these signs will be considered part of the minimum requirements. The Engineer/Inspector will determine the proper location and spacing of any sign not shown on the BC sheets, Traffic Control Plan sheets or the Work Zone Standard Sheets.
4. The "ROAD WORK NEXT X MILES" (G20-1aT) sign shall be required at high volume crossroads to advise motorists of the length of construction in either direction from the intersection. The Engineer will determine whether a roadway is considered high volume.
5. Additional traffic control devices may be shown elsewhere in the plans for higher volume crossroads.
6. When work occurs in the intersection area, appropriate traffic control devices, as shown elsewhere in the plans or as determined by the Engineer/Inspector, shall be in place.

T-INTERSECTION

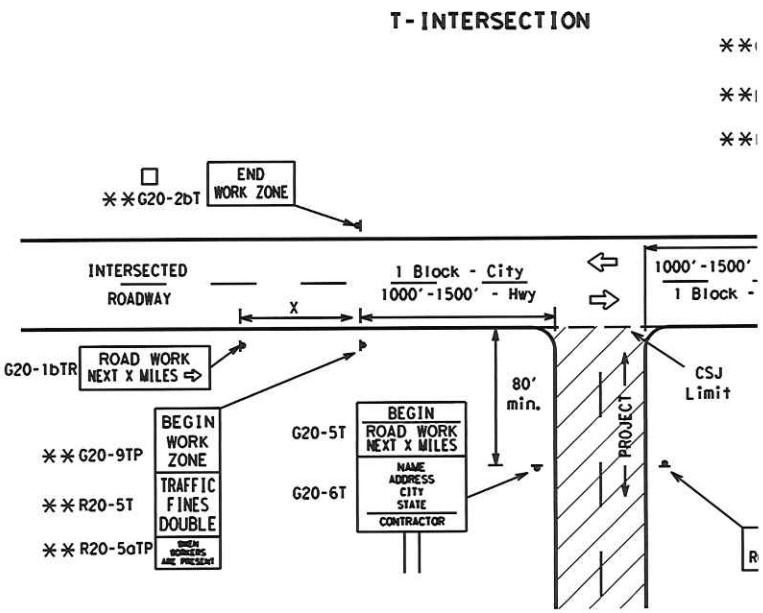

CSJ LIMITS AT T-INTERSECTION

1. The Engineer will determine the types and location of any additionc such as a flagger and accompanying signs, or other signs, that shou being performed at or near an intersection.
2. If construction closes the road at a T-intersection, the Contractor NAME" (G20-6T) sign behind the Type 3 Barricades for the road closur The "ROAD WORK NEXT X MILES" left arrow (G20-1bTL) and "ROAD WORK NE (G20-1bTR)" signs shall be replaced by the detour signing called fc

WORK AREAS IN MULTIPLE LOCATIONS WITHIN CSJ LIMITS

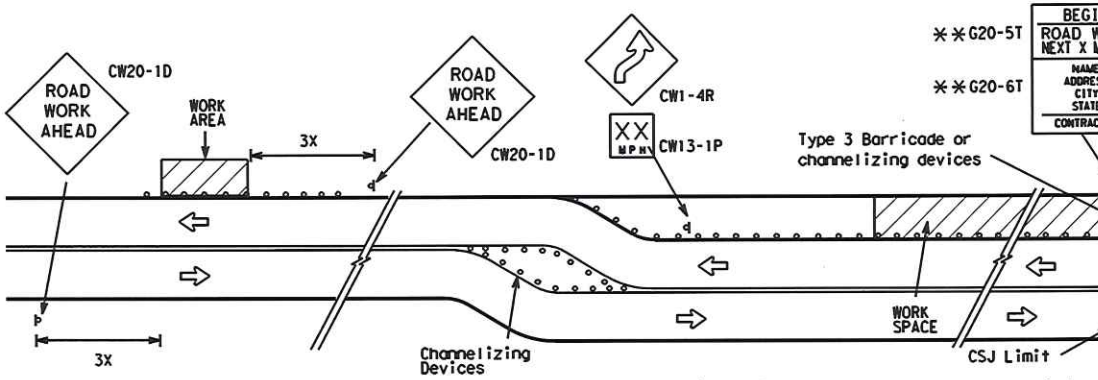

When extended distances occur between minimal work spaces, the Engineer/Inspector should ensure additional "ROAD WORK AHEAD" (CW20-1D) signs are placed in advance of these work areas to remind drivers they are still within the project limits. See the applicable TCP sheets for exact location and spacing of signs and channelizing devices.

SAMPLE LAYOUT OF SIGNING FOR WORK BEGINNING AT THE CSJ LI

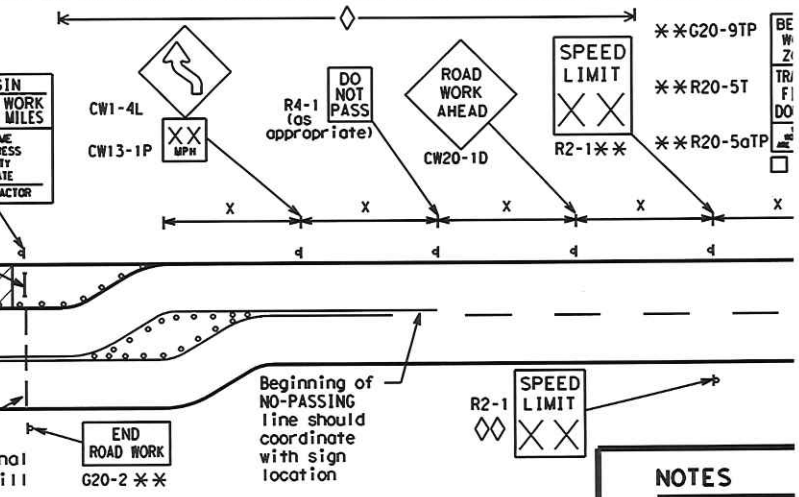

SAMPLE LAYOUT OF SIGNING FOR WORK BEGINNING DOWNSTREAM OF THE CSJ LIMITS

NOTES

The Contract to be placed

TYPICAL APPLICATION OF WORK ZONE SPEED

Work zone speed limits shall be regulatory, established in accordance with the "Procedures and approved by the Texas Transportation Commission, or by City Ordinance when within

Reduced speeds should only be posted in th
of work activity and not throughout the ent
Regulatory work zone speed signs (R2-1) shall b
or covered during periods when they are not

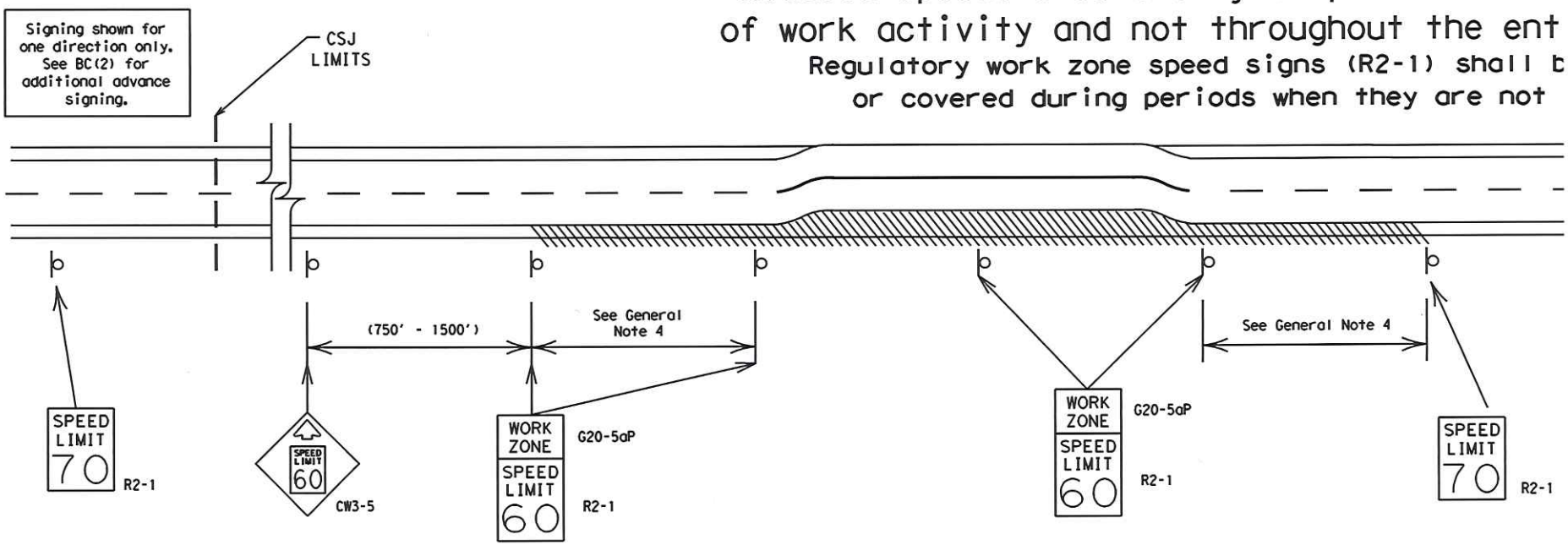

GUIDANCE FOR USE:

LONG/INTERMEDIATE TERM WORK ZONE SPEED LIMITS

This type of work zone speed limit should be included on the design of the traffic control plans when restricted geometrics with a lower design speed are present in the work zone and modification of the geometrics to a higher design speed is not feasible.

Long/Intermediate Term Work Zone Speed Limit signs, when approved as described above, should be posted and visible to the motorist when work activity is present. Work activity may also be defined as a change in the roadway that requires a reduced speed for motorists to safely negotiate the work area, including:

a) rough road or damaged pavement surface
b) substantial alteration of roadway geometrics (diversions)
c) construction detours
d) grade
e) width
f) other conditions readily apparent to the driver

As long as any of these conditions exist, the work zone speed limit signs should remain in place.

SHORT TERM WORK ZONE SPEED LIMITS

GENERAL NOTES

1. Regulatory work zone speed limits should be used onl projects where speed control is of major importance.
2. Regulatory work zone speed limit signs shall be plac mounting height.
3. Speed zone signs are illustrated for one direction c for each direction of travel.
4. Frequency of work zone speed limit signs should be:
   40 mph and greater 0.2 to 2 miles
   35 mph and less 0.2 to 1 mile
5. Regulatory speed limit signs shall have black legenc background (See "Reflective Sheeting" on BC(4)).
6. Fabrication, erection and maintenance of the"ADVANCE "WORK ZONE"(G20-5aP) plaque and the "SPEED LIMIT"(R2 directly, but shall be considered subsidiary to Iter
7. Turning signs from view, laying signs over or down w otherwise noted under "REMOVING OR COVERING" on BC(4

DISCLAIMER:
The use of this standard is governed by the "Texas Engineering Practice Act". No warranty of any kind is made by TxDOT for any purpose whatsoever. TxDOT assumes no responsibility for the conversion of this standard to other formats or for incorrect results or damages resulting from its use.

DISCLAIMER:
The use of this standard is governed by the "Texas Engineering Practice Act". No warranty of any kind is made by TxDOT for any purpose whatsoever. TxDOT assumes no responsibility for the conversion of this standard to other formats or for incorrect results or damages resulting from its use.

TYPICAL MINIMUM CLEARANCES FOR LONG TERM AND INTERMEDIATE TERM SIGNS

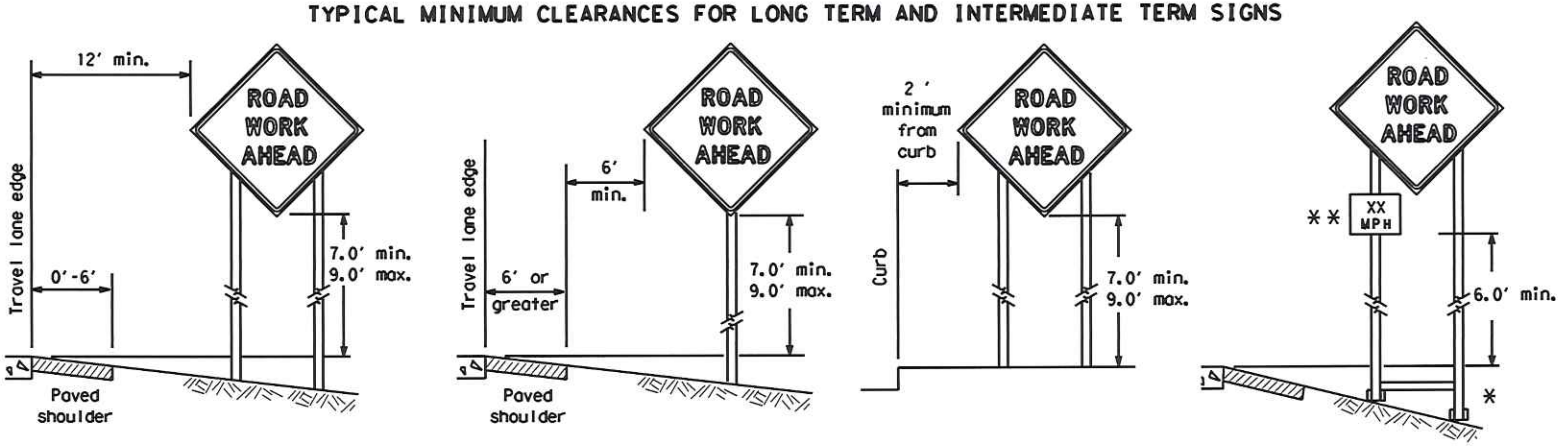

* When placing skid supports on unlevel ground, the leg post lengths must be adjusted so the sign appears straight and plumb. Objects shall NOT be placed under skids as a means of leveling.

** When plaques are placed on dual-leg supports, they should be attached to the upright nearest the travel lane. Supplemental plaques (advisory or distance) should not cover the surface of the parent sign.

ATTACHMENT FOR SIGN SUPPORTS

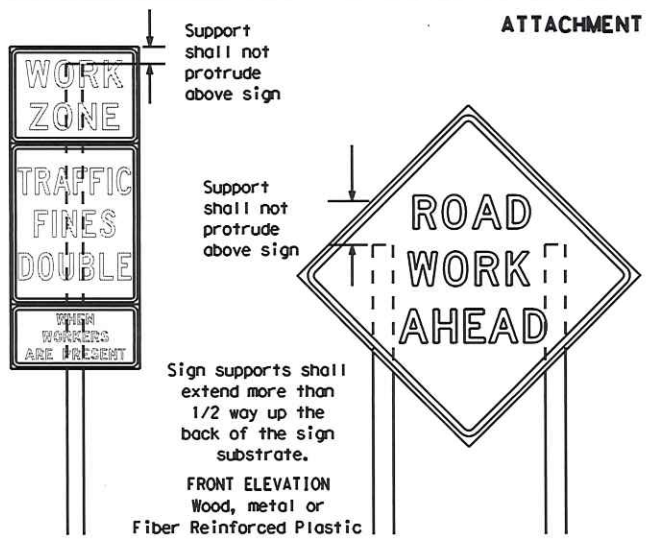

Splicing embedded perforated square metal tubing in order to extend post height will only be allowed when the splice is made using four bolts, two above and two below the spice point. Splice must be located entirely behind the sign substrate, not near the base of the support. Splice insert lengths should be at least 5 times nominal post size, centered on the splice and of at least the same gauge material.

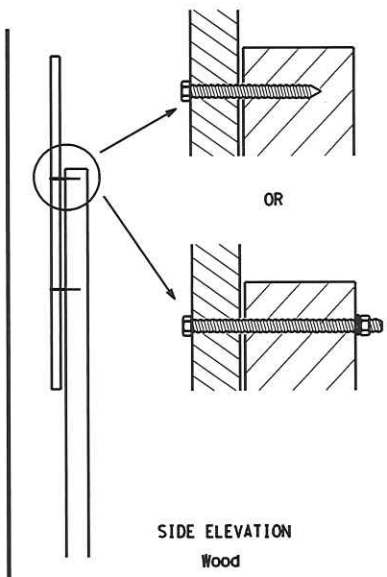

Attachment to wooden supports will be by bolts and nuts or screws. Use TxDOT's or manufacturer's recommended procedures for attaching sign substrates to other types of sign supports

Nails shall NOT be allowed. Each sign shall be attached directly to the sign support. Multiple signs shall not be joined or spliced by any means. Wood supports shall not be extended or repaired by splicing or other means.

STOP/SLOW PADDLES

1. STOP/SLOW paddles are the primary method to control traffic by flaggers. The STOP/SLOW paddle size should be 24" x 24".
2. STOP/SLOW paddles shall be retroreflectorized when used at night.
3. STOP/SLOW paddles may be attached to a staff with a minimum length of 6' to the bottom of the sign.
4. Any lights incorporated into the STOP or SLOW paddle faces shall only be as specifically described in Section 6E.03 Hand Signaling Devices in the TMUTCD.

CONTRACTOR REQUIREMENTS FOR MAINTAINING PERMANENT SIGNS WITHIN THE PROJECT LIMITS

1. Permanent signs are used to give notice of traffic laws or regulations, call attention to conditions that are potentially hazardous to traffic operations, show route designations, destinations, directions, distances, services, points of interest, and other geographical, recreational, specific service (LOGO), or cultural information. Drivers proceeding through a work zone need the same, if not better route guidance as normally installed on a roadway without construction.

GENERAL NOTES FOR WORK ZO

1. Contractor shall install a
2. Wooden sign posts shall be
3. Barricades shall NOT be us
4. All signs shall be install guide the traveling public
5. The Contractor may furnish Engineer/Inspector may req from the plans. Any variat Responsible Person. All ch the Inspector's TxDOT diar
6. The Contractor shall furni signs. Supports for tempor standard sheets. The Contra regarding installation pra the Engineer can verify th
7. The Contractor is responsi damaged or marred reflecti
8. Identification markings ma for identification shall b
9. The Contractor shall repla

DURATION OF WORK (as defi

1. The types of sign supports work being performed. The Contractor is responsible regard to crashworthiness
   a. Long-term stationary -
   b. Intermediate-term stat more than one hour.
   c. Short-term stationary
   d. Short, duration - work
   e. Mobile - work that mov

SIGN MOUNTING HEIGHT

1. The bottom of Long-term/In as shown for supplemental
2. The bottom of Short-term/S the ground.
3. Long-term/Intermediate-ter
4. Short-term/Short Duration appropriate Long-term/Inte
5. Regulatory signs shall be

SIZE OF SIGNS

1. The Contractor shall furni

SIGN SUBSTRATES

1. The Contractor shall ensur support that is being used
2. "Mesh" type materials are
3. All wooden individual sign fastened to the back of th screws that do not penetra centers. The Engineer may

REFLECTIVE SHEETING

1. All signs shall be retrore for rigid signs or DMS-831
2. White sheeting, meeting th
3. Orange sheeting, meeting t

SIGN LETTERS

1. All sign letters and numbe Administration (FHWA) and first class workmanship in

REMOVING OR COVERING

1. When sign messages may be
2. Long-term stationary or in the sign message is not ap intersections where the si
3. Signs installed on wooden covered when not required.
4. When signs are covered, th entire sign face and maint
5. Burlap shall NOT be used t
6. Duct tape or other adhesiv
7. Signs and anchor stubs sha

DISCLAIMER:
The use of this standard is governed by the "Texas Engineering Practice Act". No warranty of any kind is made by TxDOT for any purpose whatsoever. TxDOT assumes no responsibility for the conversion of this standard to other formats or for incorrect results or damages resulting from its use.

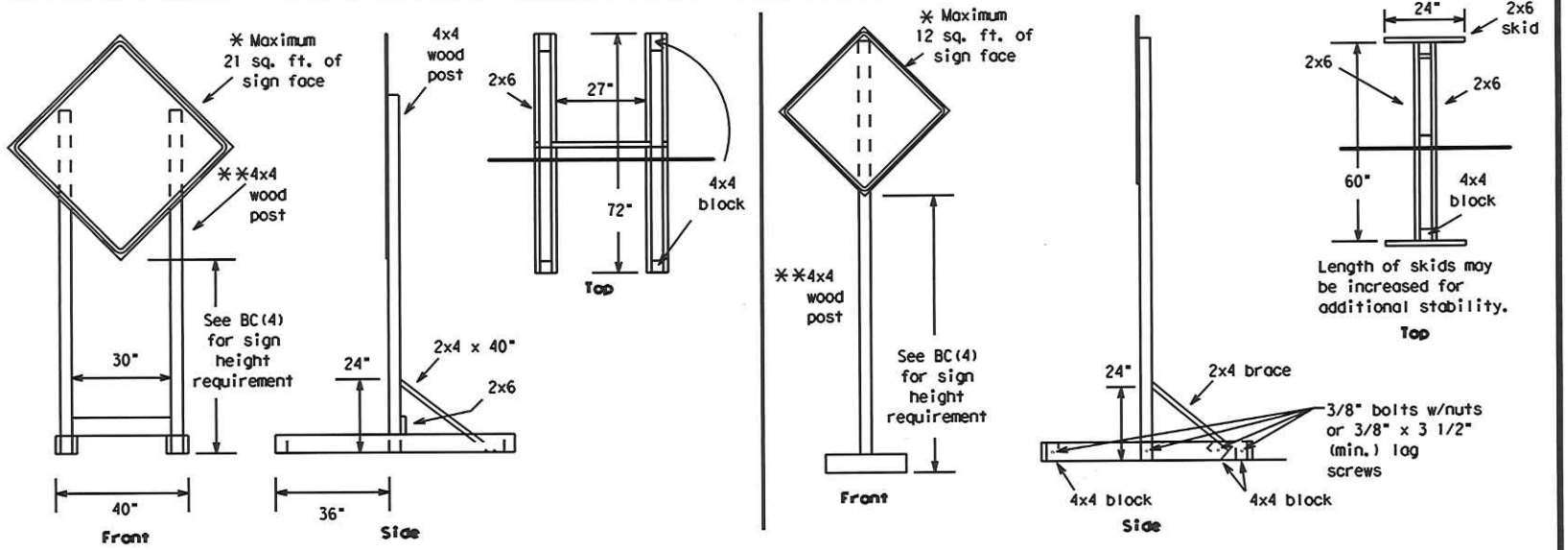

SKID MOUNTED WOOD SIGN SUPPORTS

* LONG/INTERMEDIATE TERM STATIONARY - PORTABLE SKID MOUNTED SIGN SUPPORTS

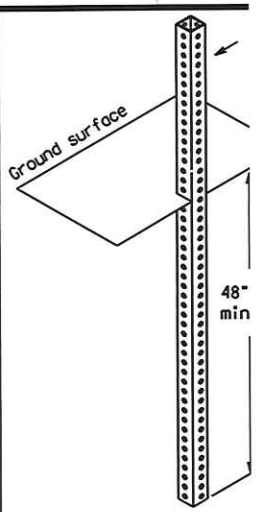

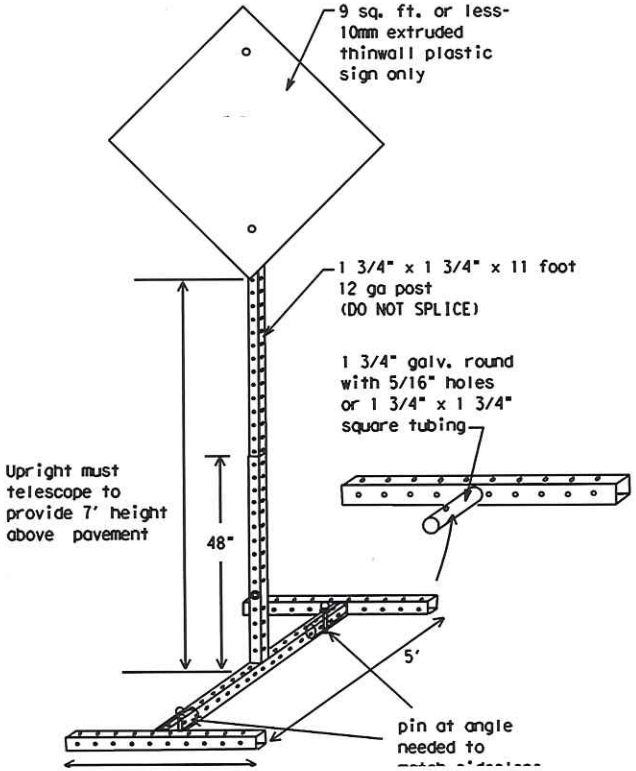

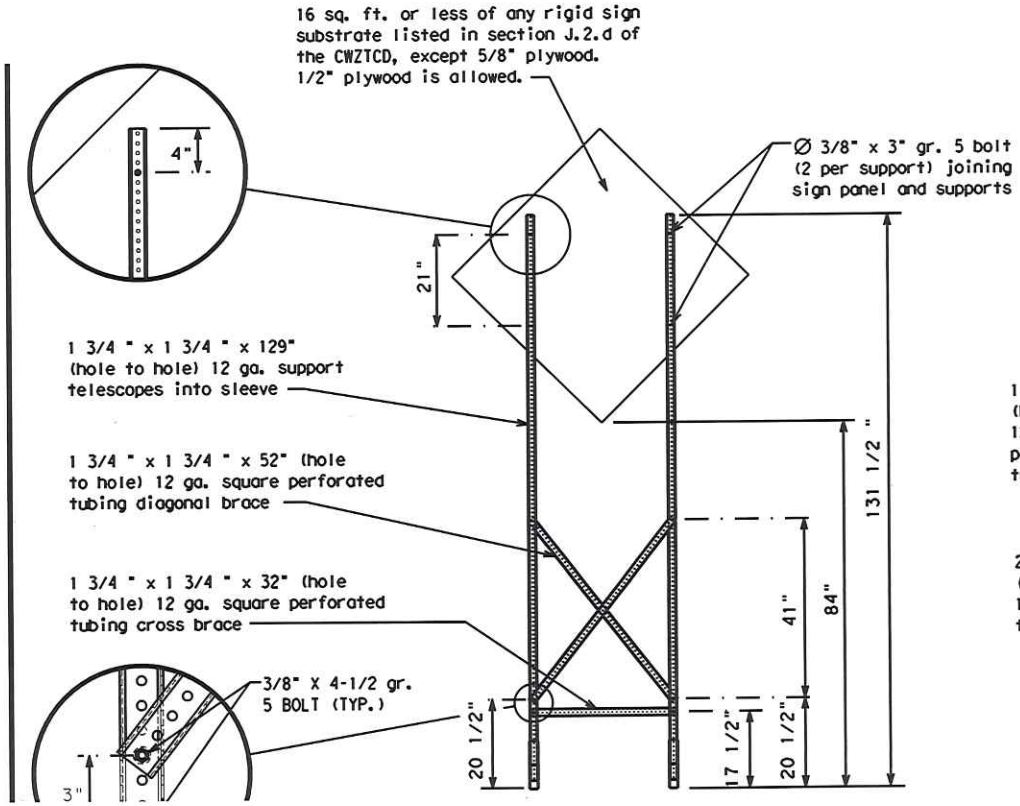

1 3/4 " x
(hole to
12 ga. sc
perforate
tubing up

2" x 2"
(hole to
12 ga. p
tubing si

R

DISCLAIMER:
The use of this standard is governed by the "Texas Engineering Practice Act". No warranty of any kind is made by TxDOT for any purpose whatsoever. TxDOT assumes no responsibility for the conversion of this standard to other formats or for incorrect results or damages resulting from its use.

WHEN NOT IN USE, REMOVE THE PCMS FROM THE RIGHT-OF-WAY OR PLACE THE PCMS BEHIND BARRIER OR GUARDRAIL WITH SIGN PANEL TURNED PARALLEL TO TRAFFIC

PORTABLE CHANGEABLE MESSAGE SIGNS

1. The Engineer/Inspector shall approve all messages used on portable changeable message signs (PCMS).
2. Messages on PCMS should contain no more than 8 words (about four to eight characters per word), not including simple words such as "TO," "FOR," "AT," etc.
3. Messages should consist of a single phase, or two phases that alternate. Three-phase messages are not allowed. Each phase of the message should convey a single thought, and must be understood by itself.
4. Use the word "EXIT" to refer to an exit ramp on a freeway; i.e., "EXIT CLOSED." Do not use the term "RAMP."
5. Always use the route or interstate designation (IH, US, SH, FM) along with the number when referring to a roadway.
6. When in use, the bottom of a stationary PCMS message panel should be a minimum 7 feet above the roadway, where possible.
7. The message term "WEEKEND" should be used only if the work is to start on Saturday morning and end by Sunday evening at midnight. Actual days and hours of work should be displayed on the PCMS if work is to begin on Friday evening and/or continue into Monday morning.
8. The Engineer/Inspector may select one of two options which are available for displaying a two-phase message on a PCMS. Each phase may be displayed for either four seconds each or for three seconds each.
9. Do not "flash" messages or words included in a message. The message should be steady burn or continuous while displayed.
10. Do not present redundant information on a two-phase message; i.e., keeping two lines of the message the same and changing the third line.
11. Do not use the word "Danger" in message.
12. Do not display the message "LANES SHIFT LEFT" or "LANES SHIFT RIGHT" on a PCMS. Drivers do not understand the message.
13. Do not display messages that scroll horizontally or vertically across the face of the sign.
14. The following table lists abbreviated words and two-word phrases that are acceptable for use on a PCMS. Both words in a phrase must be displayed together. Words or phrases not on this list should not be abbreviated, unless shown in the TMUTCD.
15. PCMS character height should be at least 18 inches for trailer mounted units. They should be visible from at least 1/2 (.5) mile and the text should be legible from at least 600 feet at night and 800 feet in daylight. Truck mounted units must have a character height of 10 inches and must be legible from at least 400 feet.
16. Each line of text should be centered on the message board rather than left or right justified.
17. If disabled, the PCMS should default to an illegible display that will not alarm motorists and will only be used to alert workers that the PCMS has malfunctioned. A pattern such as a series of horizontal solid bars is appropriate.

WORD OR PHRASE	ABBREVIATION
Access Road	ACCS RD
Alternate	ALT
Avenue	AVE
Best Route	BEST RTE
Boulevard	BLVD
Bridge	BRDG
Cannot	CANT
Center	CTR
Construction Ahead	CONST AHD
CROSSING	XING
Detour Route	DETOUR RTE
Do Not	DONT
East	E
Eastbound	(route) E
Emergency	EMER
Emergency Vehicle	EMER VEH
Entrance, Enter	ENT
Express Lane	EXP LN

WORD OR PHRASE	ABBREVIATION
Major	MAJ
Miles	MI
Miles Per Hour	MPH
Minor	MNR
Monday	MON
Normal	NORM
North	N
Northbound	(route) N
Parking	PKING
Road	RD
Right Lane	RT LN
Saturday	SAT
Service Road	SERV RD
Shoulder	SHLDR
Slippery	SLIP
South	S
Southbound	(route) S
Speed	SPD
Street	ST

RECOMMENDED PHASES AND FORMATS FOR PCMS

(The Engineer may approve other messages not :

Phase 1: Condition Lists

Road/Lane/Ramp Closure List

FREEWAY CLOSED X MILE	FRONTAGE ROAD CLOSED
ROAD CLOSED AT SH XXX	SHOULDER CLOSED XXX FT
ROAD CLSD AT FM XXXX	RIGHT LN CLOSED XXX FT
RIGHT X LANES CLOSED	RIGHT X LANES OPEN
CENTER LANE CLOSED	DAYTIME LANE CLOSURES
NIGHT LANE CLOSURES	I-XX SOUTH EXIT CLOSED
VARIOUS LANES CLOSED	EXIT XXX CLOSED X MILE
EXIT CLOSED	RIGHT LN TO BE CLOSED
MALL DRIVEWAY CLOSED	X LANES CLOSED TUE - FRI
XXXXXXXX BLVD CLOSED	

Other Condition List

ROADWORK XXX FT	ROAD REPAIRS XXXX FT
FLAGGER XXXX FT	LANE NARROWS XXXX FT
RIGHT LN NARROWS XXXX FT	TWO-WAY TRAFFIC XX MILE
MERGING TRAFFIC XXXX FT	CONST TRAFFIC XXX FT
LOOSE GRAVEL XXXX FT	UNEVEN LANES XXXX FT
DETOUR X MILE	ROUGH ROAD XXXX FT
ROADWORK PAST SH XXXX	ROADWORK NEXT FRI-SUN
BUMP XXXX FT	US XXX EXIT X MILES
TRAFFIC SIGNAL XXXX FT	LANES SHIFT *

* LANES SHIFT in Phase 1 must be used with STAY IN LANE in Phase 2.

Action

ME RI
DE NE X E
U EXI
STA US SO
TRU U US
WA F TRU
EXF DEL
RED SP XX
U OT ROU
ST L

APPLICATION GUIDELINES

1. Only 1 or 2 phases are to be used on a PCMS.
2. The 1st phase (or both) should be selected from the "Road/Lane/Ramp Closure List" and the "Other Condition List".
3. A 2nd phase can be selected from the "Action to Take/Effect on Travel, Location, General Warning, or Advance Notice Phase Lists".
4. A Location Phase is necessary only if a distance or location is not included in the first phase selected.
5. If two PCMS are used in sequence, they must be separated by a minimum of 1000 ft. Each PCMS shall be limited to two phases, and should be understandable by themselves.
6. For advance notice, when the current date is within seven days of the actual work date, calendar days should be replaced with days of the week. Advance notification should typically be for no more than one week prior to the work.

WORD

1. Th
2. Ro ap
3. EA be
4. Hi
5. RO
6. AH
7. FT
8. AT
9. Di lo

1. Barrier Reflectors shall be pre-qualified, and conform to the color and reflectivity requirements of DMS-8600. A list of prequalified Barrier Reflectors can be found at the Material Producer List web address shown on BC(1).
2. Color of Barrier Reflectors shall be as specified in the TMUTCD. The cost of the reflectors shall be considered subsidiary to Item 512.

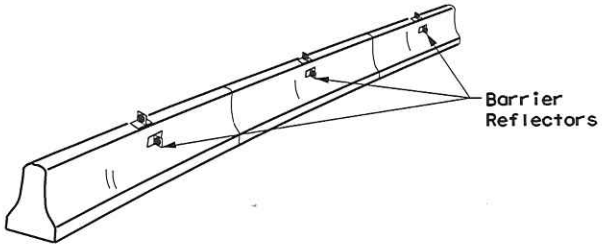

CONCRETE TRAFFIC BARRIER (CTB)

3. Where traffic is on one side of the CTB, two (2) Barrier Reflectors shall be mounted in approximately the midsection of each section of CTB. An alternate mounting location is uniformly spaced at one end of each CTB. This will allow for attachment of a barrier grapple without damaging the reflector. The Barrier Reflector mounted on the side of the CTB shall be located directly below the reflector mounted on top of the barrier, as shown in the detail above.
4. Where CTB separates two-way traffic, three barrier reflectors shall be mounted on each section of CTB. The reflector unit on top shall have two yellow reflective faces (Bi-Directional)while the reflectors on each side of the barrier shall have one yellow reflective face, as shown in the detail above.
5. When CTB separates traffic traveling in the same direction, no barrier reflectors will be required on top of the CTB.
6. Barrier Reflector units shall be yellow or white in color to match the edgeline being supplemented.
7. Maximum spacing of Barrier Reflectors is forty (40) feet.
8. Pavement markers or temporary flexible-reflective roadway marker tabs shall NOT be used as CTB delineation.
9. Attachment of Barrier Reflectors to CTB shall be per manufacturer's recommendations.
10. Missing or damaged Barrier Reflectors shall be replaced as directed by the Engineer.
11. Single slope barriers shall be delineated as shown on the above detail.

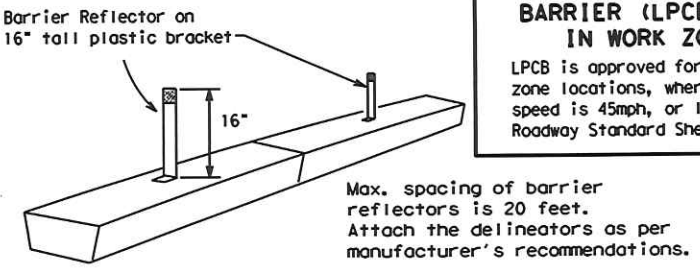

LOW PROFILE CONCRETE BARRIER (LPCB)

LOW PROFILE CONCRETE BARRIER (LPCB) USED IN WORK ZONES

LPCB is approved for use in work zone locations, where the posted speed is 45mph, or less. See Roadway Standard Sheet LPCB.

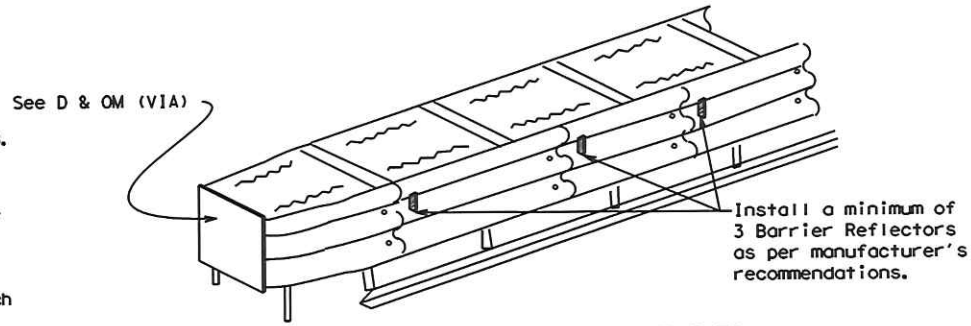

DELINEATION OF END TREATMENTS

END TREATMENTS FOR CTB'S USED IN WORK ZONES

End treatments used on CTB's in work zones shall meet the apppropriate crashworthy standards as defined in the Manual for Assessing Safety Hardware (MASH). Refer to the CWZTCD List for approved end treatments and manufacturers.

BARRIER REFLECTORS FOR CONCRETE TRAFFIC BARRIER AND ATTENUATORS

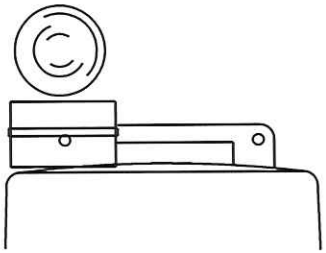

Type C Warning Light or approved substitute mounted on a drum adjacent to the travel way.

WARNING LIGHTS

1. Warning lights shall meet the requirements of the TMUTCD.
2. Warning lights shall NOT be installed on barricades.
3. Type A-Low Intensity Flashing Warning Lights are commonly used with drums. They are intended to warn of or mark a potentially hazardous area. Their use shall be as indicated on this sheet and/or other sheets of the plans by the designation "FL". The Type A Warning Lights shall not be used with signs manufactured with Type B_{FL} or C_{FL} Sheeting meeting the requirements of Departmental Material Specification DMS-8300.
4. Type-C and Type D 360 degree Steady Burn Lights are intended to be used in a series for delineation to supplement other traffic control devices. Their use shall be as indicated on this sheet and/or other sheets of the plans by the designation "SB".
5. The Engineer/Inspector or the plans shall specify the location and type of warning lights to be installed on the traffic control devices.
6. When required by the Engineer, the Contractor shall furnish a copy of the warning lights certification. The warning light manufacturer will certify the warning lights meet the requirements of the latest ITE Purchase Specifications for Flashing and Steady-Burn Warning Lights.
7. When used to delineate curves, Type-C and Type D Steady Burn Lights should only be placed on the outside of the curve, not the inside.
8. The location of warning lights and warning reflectors on drums shall be as shown elsewhere in the plans.

WARNING LIGHTS MOUNTED ON PLASTIC DRUMS

1. Type A flashing warning lights are intended to warn drivers that they are approaching or are in a potentially hazardous area.
2. Type A random flashing warning lights are not intended for delineation and shall not be used in a series.
3. A series of sequential flashing warning lights placed on channelizing devices to form a merging taper may be used for delineation. If used, the successive flashing of the sequential warning lights should occur from the beginning of the taper to the end of the merging taper in order to identify the desired vehicle path. The rate of flashing for each light shall be 65 flashes per minute, plus or minus 10 flashes.

DISCLAIMER:
The use of this standard is governed by the "Texas Engineering Practice Act". No warranty of any kind is made by TxDOT for any purpose whatsoever. TxDOT assumes no responsibility for the conversion of this standard to other formats or for incorrect results or damages resulting from its use.

TYP
B
C

DISCLAIMER:
The use of this standard is governed by the "Texas Engineering Practice Act". No warranty of any kind is made by TxDOT for any purpose whatsoever. TxDOT assumes no responsibility for the conversion of this standard to other formats or for incorrect results or damages resulting from its use.

GENERAL NOTES

1. For long term stationary work zones on freeways, drums shall be used as the primary channelizing device.
2. For intermediate term stationary work zones on freeways, drums should be used as the primary channelizing device but may be replaced in tangent sections by vertical panels, or 42" two-piece cones. In tangent sections, one-piece cones may be used with the approval of the Engineer but only if personnel are present on the project at all times to maintain the cones in proper position and location.
3. For short term stationary work zones on freeways, drums are the preferred channelizing device but may be replaced in tapers, transitions and tangent sections by vertical panels, two-piece cones or one-piece cones as approved by the Engineer.
4. Drums and all related items shall comply with the requirements of the current version of the "Texas Manual on Uniform Traffic Control Devices" (TMUTCD) and the "Compliant Work Zone Traffic Control Devices List" (CWZTCD).
5. Drums, bases, and related materials shall exhibit good workmanship and shall be free from objectionable marks or defects that would adversely affect their appearance or serviceability.
6. The Contractor shall have a maximum of 24 hours to replace any plastic drums identified for replacement by the Engineer/Inspector. The replacement device must be an approved device.

GENERAL DESIGN REQUIREMENTS

Pre-qualified plastic drums shall meet the following requirements:

1. Plastic drums shall be a two-piece design; the "body" of the drum shall be the top portion and the "base" shall be the bottom.
2. The body and base shall lock together in such a manner that the body separates from the base when impacted by a vehicle traveling at a speed of 20 MPH or greater but prevents accidental separation due to normal handling and/or air turbulence created by passing vehicles.
3. Plastic drums shall be constructed of lightweight flexible, and deformable materials. The Contractor shall NOT use metal drums or single piece plastic drums as channelization devices or sign supports.
4. Drums shall present a profile that is a minimum of 18 inches in width at the 36 inch height when viewed from any direction. The height of drum unit (body installed on base) shall be a minimum of 36 inches and a maximum of 42 inches.
5. The top of the drum shall have a built-in handle for easy pickup and shall be designed to drain water and not collect debris. The handle shall have a minimum of two widely spaced 9/16 inch diameter holes to allow attachment of a warning light, warning reflector unit or approved compliant sign.
6. The exterior of the drum body shall have a minimum of four alternating orange and white retroreflective circumferential stripes not less than 4 inches nor greater than 8 inches in width. Any non-reflectorized space between any two adjacent stripes shall not exceed 2 inches in width.
7. Bases shall have a maximum width of 36 inches, a maximum height of 4 inches, and a minimum of two footholds of sufficient size to allow base to be held down while separating the drum body from the base.
8. Plastic drums shall be constructed of ultra-violet stabilized, orange, high-density polyethylene (HDPE) or other approved material.
9. Drum body shall have a maximum unballasted weight of 11 lbs.
10. Drum and base shall be marked with manufacturer's name and model number.

RETROREFLECTIVE SHEETING

1. The stripes used on drums shall be constructed of sheeting meeting the color and retroreflectivity requirements of Departmental Materials Specification DMS-8300, "Sign Face Materials." Type A or Type B reflective sheeting shall be supplied unless otherwise specified in the plans.
2. The sheeting shall be suitable for use on and shall adhere to the drum surface such that, upon vehicular impact, the sheeting shall remain adhered in-place and exhibit no delaminating, cracking, or loss of retroreflectivity other than that loss due to abrasion of the sheeting surface.

BALLAST

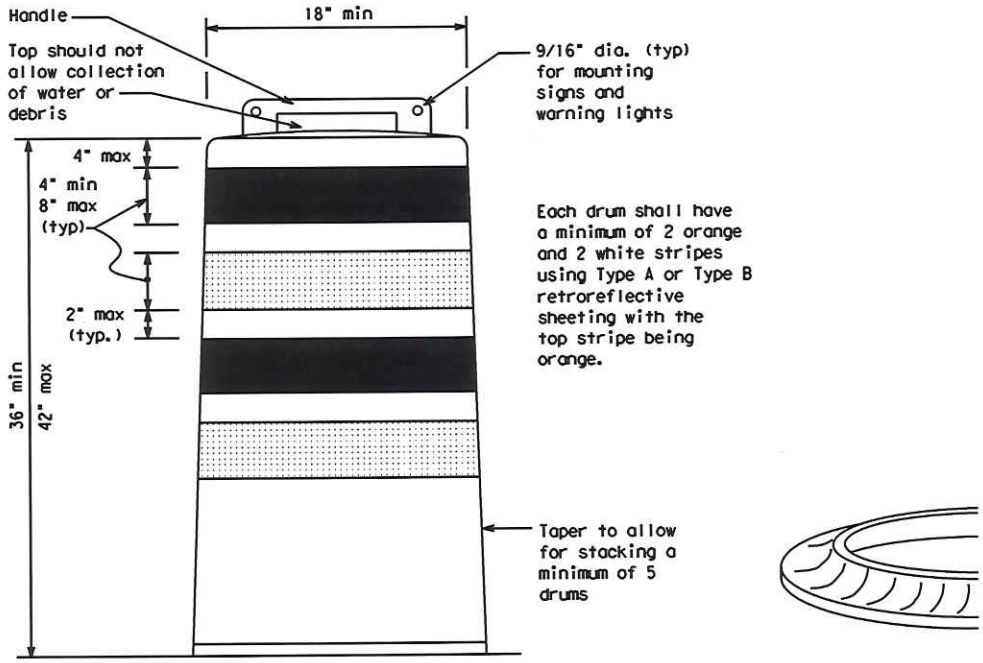

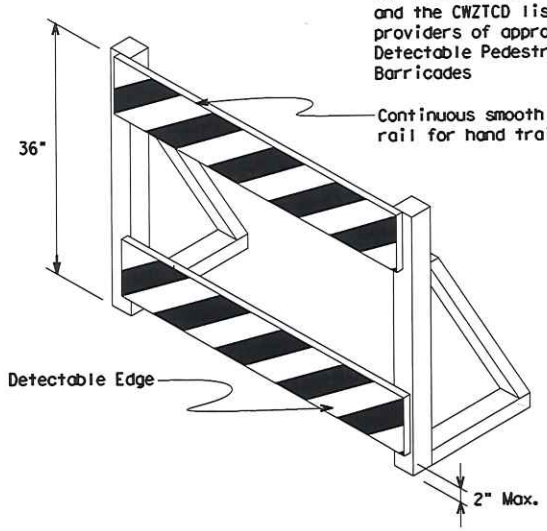

DETECTABLE PEDESTRIAN BARRICADES

1. When existing pedestrian facilities are disrupted, closed, or relocated in a TTC zone, the temporary facilities shall be detectable and include accessibility features consistent with the features present in the existing pedestrian facility. Refer to WZ(BTS-2) for Pedestrian Control requirements for Sidewalk

DISCLAIMER:
The use of this standard is governed by the "Texas Engineering Practice Act". No warranty of any kind is made by TxDOT for any purpose whatsoever. TxDOT assumes no responsibility for the conversion of this standard to other formats or for incorrect results or damages resulting from its use.

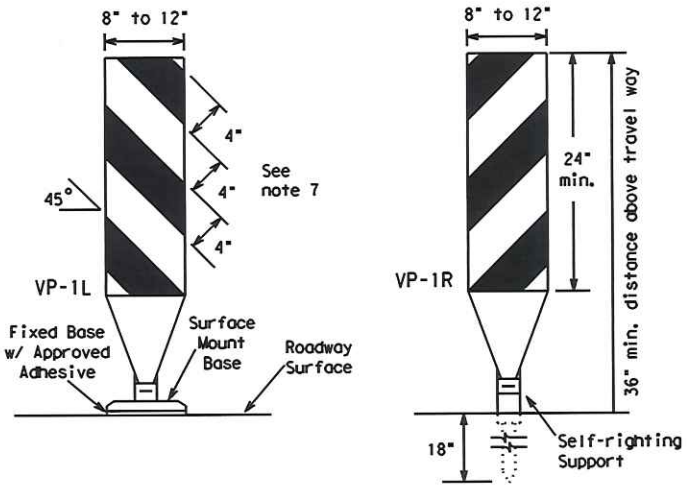

FIXED

(Rigid or self-righting)

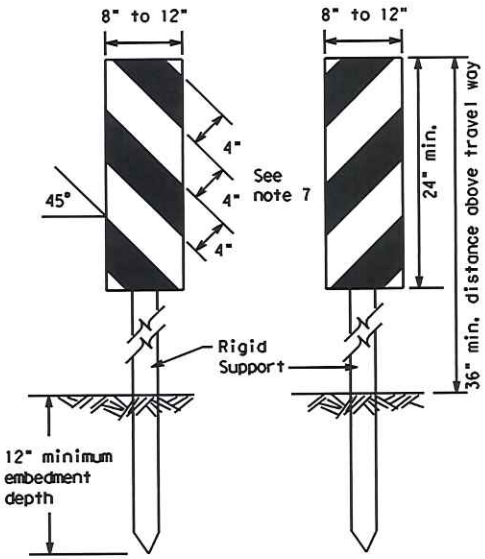

DRIVEABLE

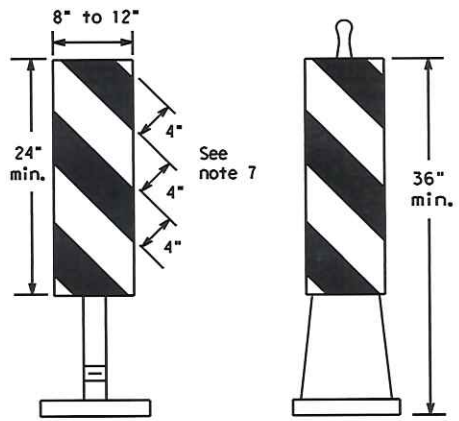

(Rigid or self-righting)

PORTABLE

1. Vertical Panels (VP's) are normally used to channelize traffic or divide opposing lanes of traffic.
2. VP's may be used in daytime or nighttime situations. They may be used at the edge of shoulder drop-offs and other areas such as lane transitions where positive daytime and nighttime delineation is required. The Engineer/Inspector shall refer to the Roadway Design Manual for additional requirements on the use VP's for drop-offs.
3. VP's should be mounted back to back if used at the edge of cuts adjacent to two-way two lane roadways. Stripes are to be reflective orange and reflective white and should always slope downward toward the travel lane.
4. VP's used on expressways and freeways or other high speed roadways, may have more than 270 square inches of retroreflective area facing traffic.
5. Self-righting supports are available with portable base. See "Compliant Work Zone Traffic Control Devices List" (CWZTCD).
6. Sheeting for the VP's shall be retroreflective Type A or Type B conforming to Departmental Material Specification DMS-8300, unless noted otherwise.
7. Where the height of reflective material on the vertical panel is 36 inches or greater, a panel stripe of 6 inches shall be used.

VERTICAL PANELS (VPs)

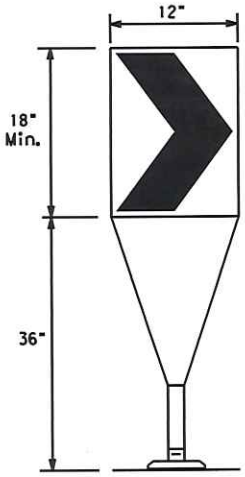

Fixed Base w/ Approved Adhesive (Driveable Base, or Flexible Support can be used)

1. The chevron shall be minimum size of 12 by
2. Chevrons are intended change of alignment w and provide additiona vehicle operators wit horizontal alignment
3. Chevrons, when used, side of a sharp curve of an intersection. T and at right angles t Spacing should be suc has three in view, un eliminates its need.
4. To be effective, the for at least 500 feet
5. Chevrons shall be ora tive legend. Sheeting retroreflective Type Departmental Material unless noted otherwis requirements of DMS-8
6. For Long Term Station transitions on freewa self-righting chevron plastic drums but not

CHEVRONS

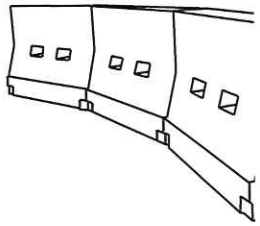

LONGITUDINAL CHANNELIZING DEVICES (LCD)

1. LCDs are crashworthy, lightweight, deformable devices that are can be connected together. They are not designed to contain or
2. LCDs may be used instead of a line of cones or drums.
3. LCDs shall be placed in accordance to application and installc used only when shown on the CWZTCD list.
4. LCDs should not be used to provide positive protection for obs
5. LCDs shall be supplemented with retroreflective delineation as on BC(7) when placed roughly parallel to the travel lanes.
6. LCDs used as barricades placed perpendicular to traffic shoulc sheeting meeting the requirements for barricade rails as shown near the top of the LCD along the full length of the device.

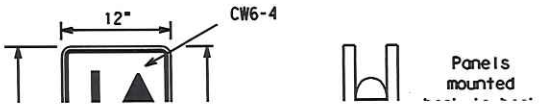

1. Opposing Traffic Lane Dividers (OTLD) are delineation devices designed to convert a normal one-way roadway section to two-way operation. OTLD's are used on temporary centerlines. The upward and downward arrows on the sign's face indicate the direction of traffic on either side of the divider. The base is secured to the pavement with an adhesive or rubber weight to minimize movement

WATER BALLASTED SYSTEMS USED AS BARRIERS

1. Water ballasted systems used as barriers shall not be used sol work space per the appropriate Manual for Assessing Safety Har

DISCLAIMER: The use of this standard is governed by the "Texas Engineering Practice Act". No warranty of any kind is made by TxDOT for any purpose whatsoever. TxDOT assumes no responsibility for the conversion of this standard to other formats or for incorrect results or damages resulting from its use.

TYPE 3 BARRICADES

1. Refer to the Compliant Work Zone Traffic Control Devices List (CWZTCD) for details of the Type 3 Barricades and a list of all materials used in the construction of Type 3 Barricades.
2. Type 3 Barricades shall be used at each end of construction projects closed to all traffic.
3. Barricades extending across a roadway should have stripes that slope downward in the direction toward which traffic must turn in detouring. When both right and left turns are provided, the chevron striping may slope downward in both directions from the center of the barricade. Where no turns are provided at a closed road, striping should slope downward in both directions toward the center of roadway.
4. Striping of rails, for the right side of the roadway, should slope downward to the left. For the left side of the roadway, striping should slope downward to the right.
5. Identification markings may be shown only on the back of the barricade rails. The maximum height of letters and/or company logos used for identification shall be 1".
6. Barricades shall not be placed parallel to traffic unless an adequate clear zone is provided.
7. Warning lights shall NOT be installed on barricades.
8. Where barricades require the use of weights to keep from turning over, the use of sandbags with dry, cohesionless sand is recommended. The sandbags will be tied shut to keep the sand from spilling and to maintain a constant weight. Sand bags shall not be stacked in a manner that covers any portion of a barricade rails reflective sheeting. Rock, concrete, iron, steel or other solid objects will NOT be permitted. Sandbags should weigh a minimum of 35 lbs and a maximum of 50 lbs. Sandbags shall be made of a durable material that tears upon vehicular impact. Rubber (such as tire inner tubes) shall not be used for sandbags. Sandbags shall only be placed along or upon the base supports of the device and shall not be suspended above ground level or hung with rope, wire, chains or other fasteners.
9. Sheeting for barricades shall be retroreflective Type A or Type B conforming to Departmental Material Specification DMS-8300 unless otherwise noted.

Barricades shall NOT be used as a sign support.

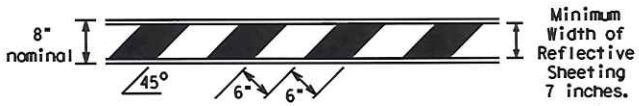

TYPICAL STRIPING DETAIL FOR BARRICADE RAIL

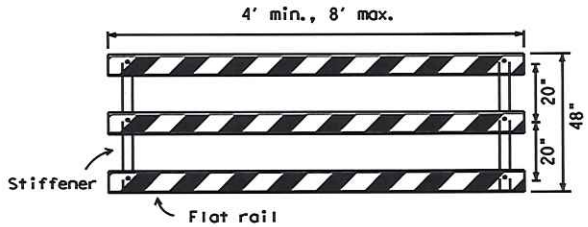

Stiffener may be inside or outside of support, but no more than 2 stiffeners shall be allowed on one barricade.

TYPICAL PANEL DETAIL FOR SKID OR POST TYPE BARRICADES

Each roadway of a divided highway shall be barricaded in the same manner.

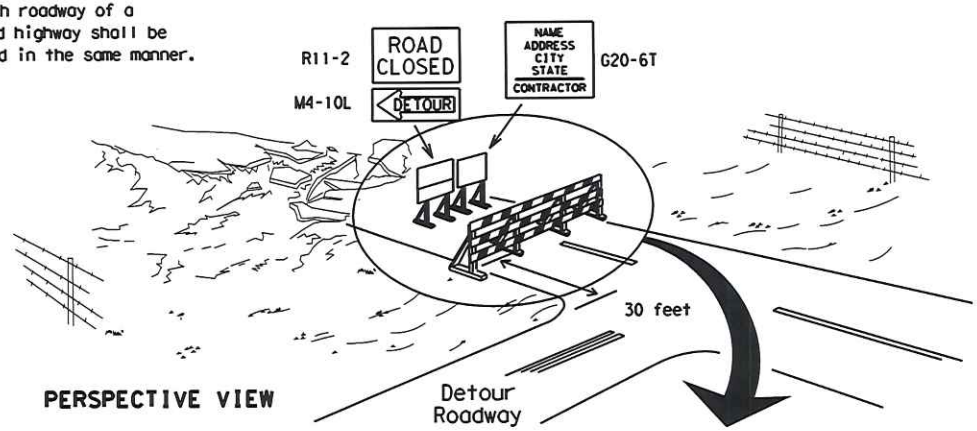

PERSPECTIVE VIEW

The three rails on Type 3 barricades shall be reflectorized orange and reflective white stripes on one side facing one-way traffic and both sides for two-way traffic.

Barricade striping should slant downward in the direction of detour.

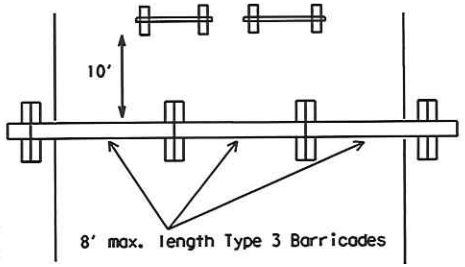

PLAN VIEW

1. Signs should be mounted on independent supports at a 7 foot mounting height in center of roadway. The signs should be a minimum of 10 feet behind Type 3 Barricades.
2. Advance signing shall be as specified elsewhere in the plans.

TYPE 3 BARRICADE (POST AND SKID) TYPICAL APPLICATION

CONES

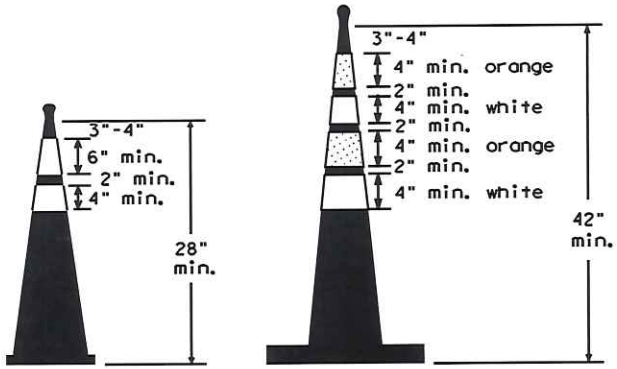

Two-Piece cones

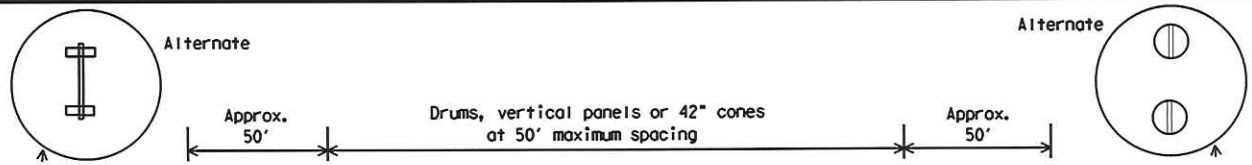

28" Cones shall have a mini

42" 2-piece cones shall ho
30 lbs. inclu

DISCLAIMER:
The use of this standard is governed by the "Texas Engineering Practice Act". No warranty of any kind is made by TxDOT for any purpose whatsoever. TxDOT assumes no responsibility for the conversion of this standard to other formats or for incorrect results or damages resulting from its use.

WORK ZONE PAVEMENT MARKINGS

GENERAL

1. The Contractor shall be responsible for maintaining work zone and existing pavement markings, in accordance with the standard specifications and special provisions, on all roadways open to traffic within the CSJ limits unless otherwise stated in the plans.
2. Color, patterns and dimensions shall be in conformance with the "Texas Manual on Uniform Traffic Control Devices" (TMUTCD).
3. Additional supplemental pavement marking details may be found in the plans or specifications.
4. Pavement markings shall be installed in accordance with the TMUTCD and as shown on the plans.
5. When short term markings are required on the plans, short term markings shall conform with the TMUTCD, the plans and details as shown on the Standard Plan Sheet WZ(STPM).
6. When standard pavement markings are not in place and the roadway is opened to traffic, DO NOT PASS signs shall be erected to mark the beginning of the sections where passing is prohibited and PASS WITH CARE signs at the beginning of sections where passing is permitted.
7. All work zone pavement markings shall be installed in accordance with Item 662, "Work Zone Pavement Markings."

RAISED PAVEMENT MARKERS

1. Raised pavement markers are to be placed according to the patterns on BC(12).
2. All raised pavement markers used for work zone markings shall meet the requirements of Item 672, "RAISED PAVEMENT MARKERS" and Departmental Material Specification DMS-4200 or DMS-4300.

PREFABRICATED PAVEMENT MARKINGS

1. Removable prefabricated pavement markings shall meet the requirements of DMS-8241.
2. Non-removable prefabricated pavement markings (foil back) shall meet the requirements of DMS-8240.

MAINTAINING WORK ZONE PAVEMENT MARKINGS

1. The Contractor will be responsible for maintaining work zone pavement markings within the work limits.
2. Work zone pavement markings shall be inspected in accordance with the frequency and reporting requirements of work zone traffic control device inspections as required by Form 599.
3. The markings should provide a visible reference for a minimum distance of 300 feet during normal daylight hours and 160 feet when illuminated by automobile low-beam headlights at night, unless sight distance is restricted by roadway geometrics.
4. Markings failing to meet this criteria within the first 30 days after placement shall be replaced at the expense of the Contractor as per Specification Item 662.

REMOVAL OF PAVEMENT MARKINGS

1. Pavement markings that are no longer applicable, could create confusion or direct a motorist toward or into the closed portion of the roadway shall be removed or obliterated before the roadway is opened to traffic.
2. The above shall not apply to detours in place for less than three days, where flaggers and/or sufficient channelizing devices are used in lieu of markings to outline the detour route.
3. Pavement markings shall be removed to the fullest extent possible, so as not to leave a discernable marking. This shall be by any method approved by TxDOT Specification Item 677 for "Eliminating Existing Pavement Markings and Markers".
4. The removal of pavement markings may require resurfacing or seal coating portions of the roadway as described in Item 677.
5. Subject to the approval of the Engineer, any method that proves to be successful on a particular type pavement may be used.
6. Blast cleaning may be used but will not be required unless specifically shown in the plans.
7. Over-painting of the markings SHALL NOT BE permitted.
8. Removal of raised pavement markers shall be as directed by the Engineer.
9. Removal of existing pavement markings and markers will be paid for directly in accordance with Item 677, "ELIMINATING EXISTING PAVEMENT MARKINGS AND MARKERS," unless otherwise stated in the plans.
10. Black-out marking tape may be used to cover conflicting existing markings for periods less than two weeks when approved by the Engineer.

Temporary Fl
Roadway

TOP VIEW

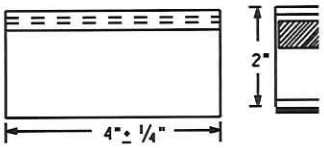

**STAPLES OR NAILS SHA
TEMPORARY FLEXIBLE-R
TABS TO THE**

1. Temporary flexible-reflective
shall meet the requirements of
2. Tabs detailed on this sheet ar
Engineer or designated represe
normally required, however at
or "B" below may be imposed to
roadway.
   A. Select five (5) or more
   and submit to the Constr
   Section to determine spe
   B. Select five (5) tabs and
   (5) tabs at 24 inch inte
   straight line. Using a m
   run over the markers wit
   of 35 to 40 miles per ho
   more than one (1) out of
   be lost or displaced as
3. Small design variances may be
4. See Standard Sheet WZ(STPM) fo
Standard Sheet TCP(7-1) for ta

RAISED PAVEMENT MARK

1. Raised pavement markers used
product list, and meet the re
2. All temporary construction ro
project shall be of the same
3. Adhesive for guidemarks shall
butyl rubber pad for all surf
surfaces.

Guidemarks shall be designated a
YELLOW - (two amber reflectiv
WHITE - (one silver reflectiv

PAVEMENT MARKING PATTERNS

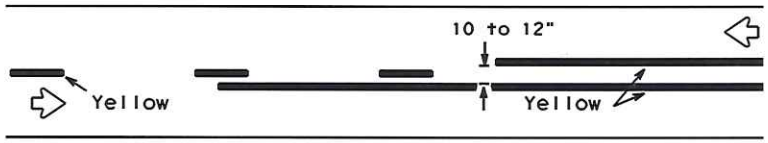

REFLECTORIZED PAVEMENT MARKINGS - PATTERN A

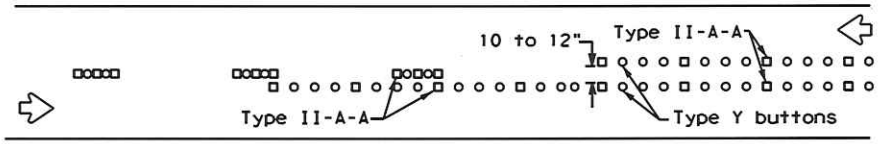

RAISED PAVEMENT MARKERS - PATTERN A

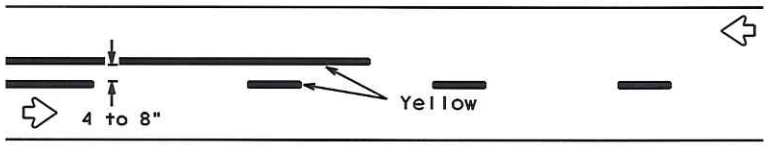

REFLECTORIZED PAVEMENT MARKINGS - PATTERN B

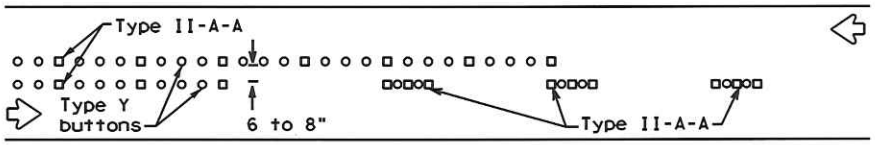

RAISED PAVEMENT MARKERS - PATTERN B

Pattern A is the TXDOT Standard, however Pattern B may be used if approved by the Engineer.
Prefabricated markings may be substituted for reflectorized pavement markings.

CENTER LINE & NO-PASSING ZONE BARRIER LINES FOR TWO-LANE, TWO-WAY HIGHWAYS

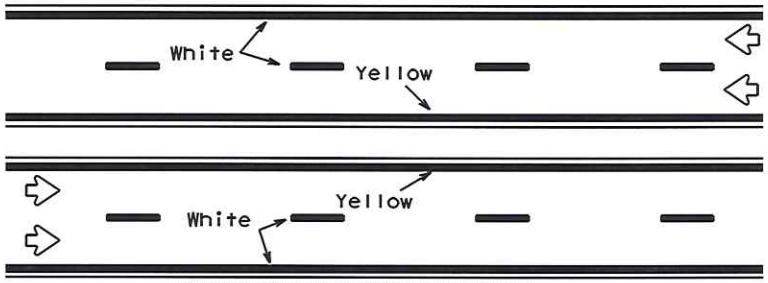

REFLECTORIZED PAVEMENT MARKINGS

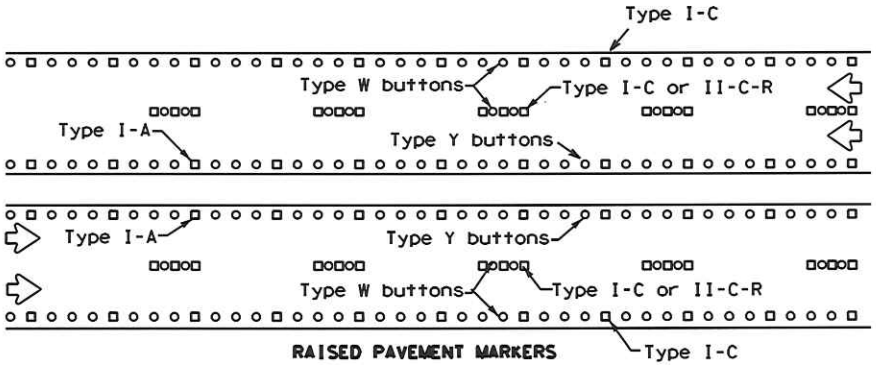

RAISED PAVEMENT MARKERS

Prefabricated markings may be substituted for reflectorized pavement markings.

EDGE & LANE LINES FOR DIVIDED HIGHWAY

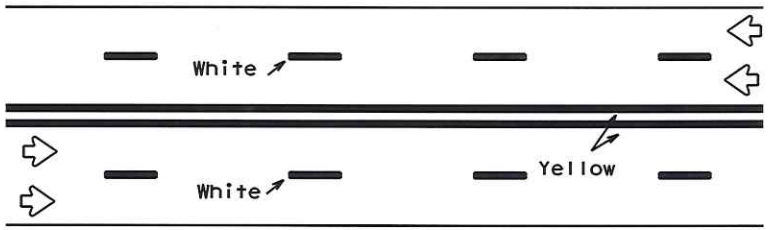

REFLECTORIZED PAVEMENT MARKINGS

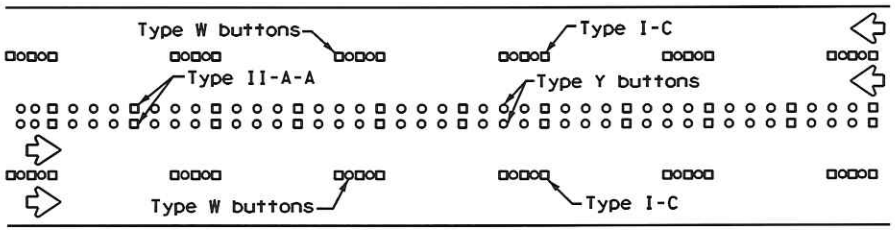

RAISED PAVEMENT MARKERS

Prefabricated markings may be substituted for reflectorized pavement markings.

LANE & CENTER LINES FOR MULTILANE UNDIVIDED HIGHWAYS

DISCLAIMER:
The use of this standard is governed by the "Texas Engineering Practice Act". No warranty of any kind is made by TxDOT for any purpose whatsoever. TxDOT assumes no responsibility for the conversion of this standard to other formats or for incorrect results or damages resulting from its use.

SOL
LIN

BROI
LIN

REM

PA
If raise
to suppl
the mark
top of t
mid leng
lines or
solid li
removal
and tape.

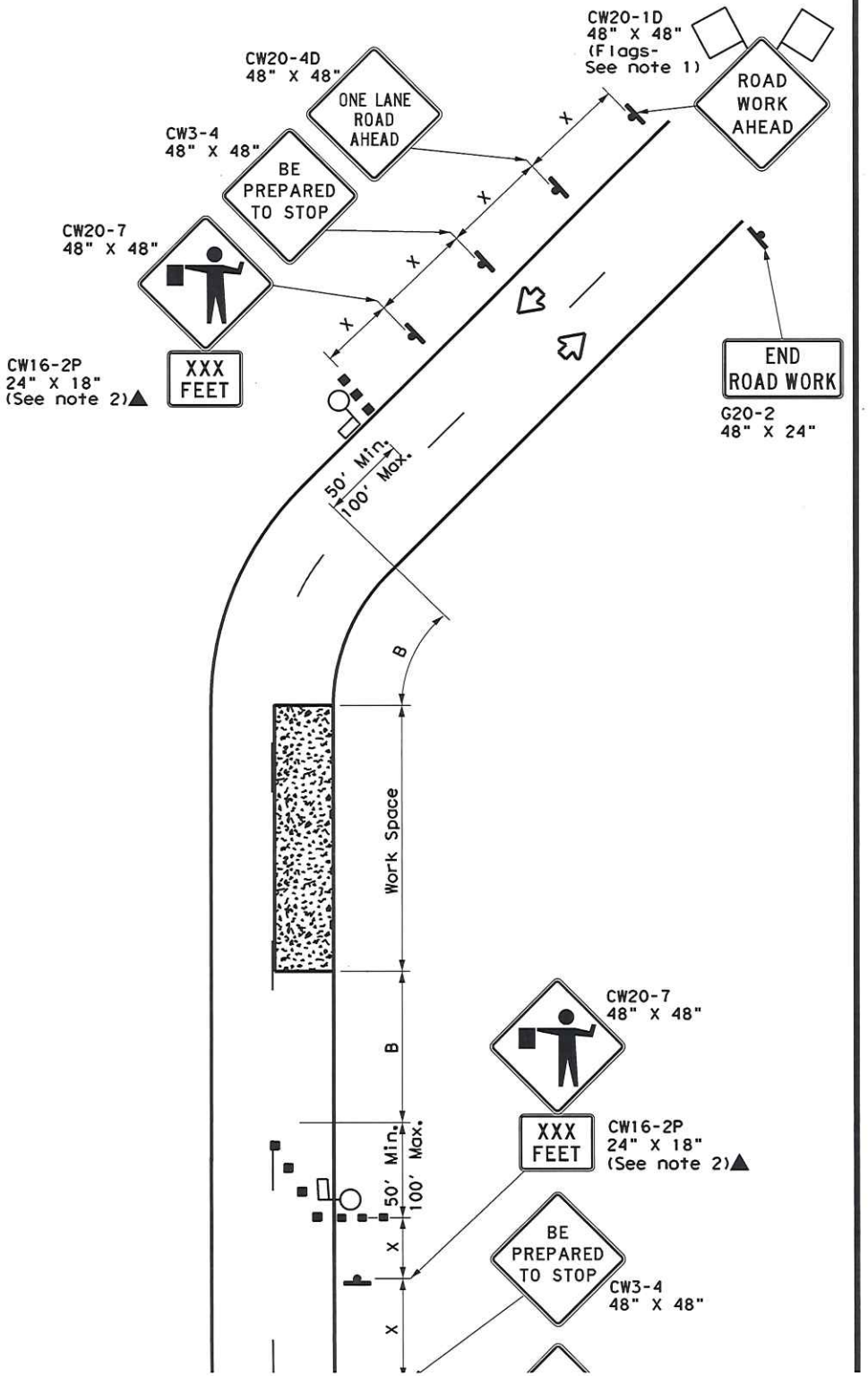

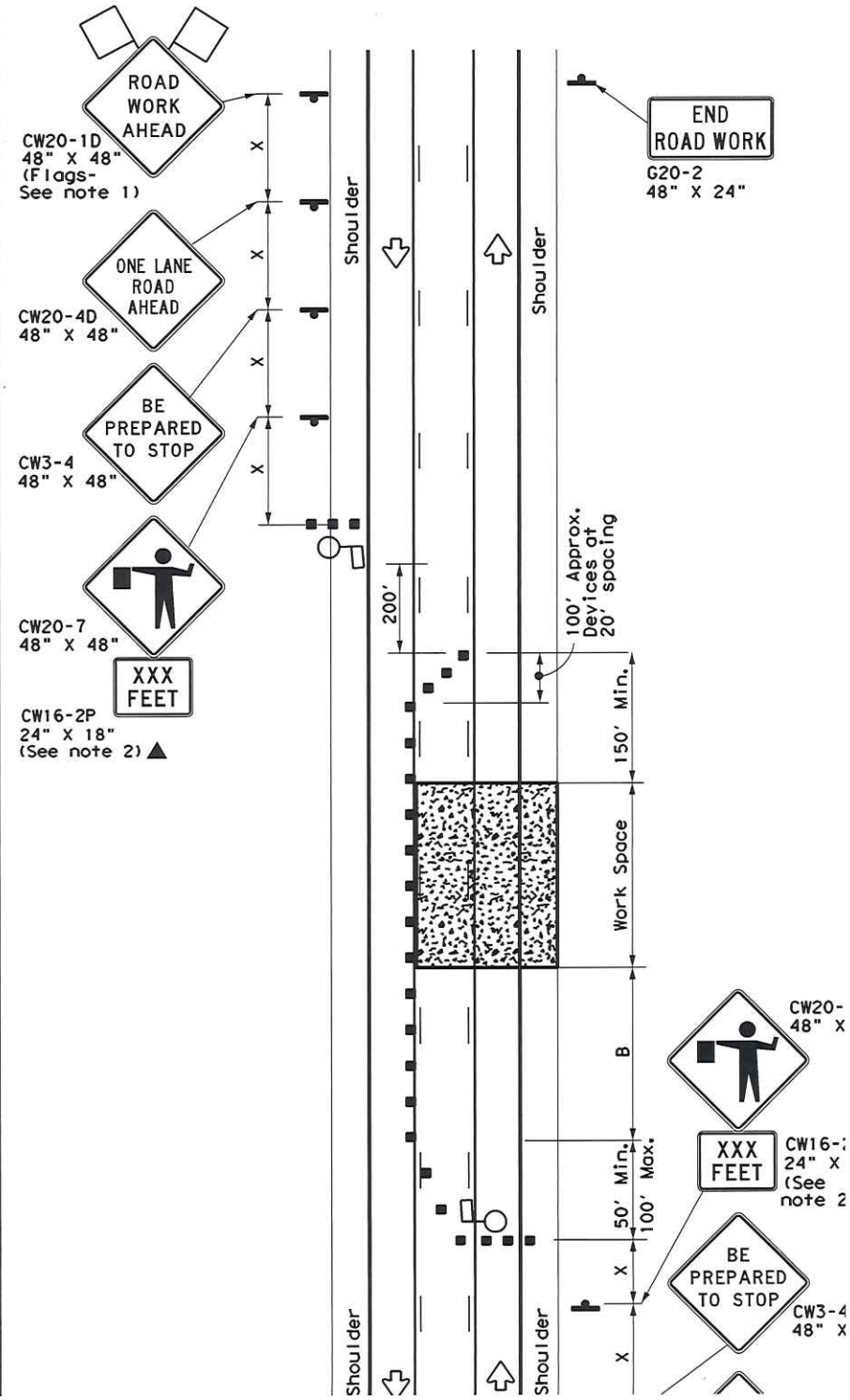

DISCLAIMER:
The use of this standard is governed by the "Texas Engineering Practice Act". No warranty of any kind is made by TxDOT for any purpose whatsoever. TxDOT assumes no responsibility for the conversion of this standard to other formats or for incorrect results or damages resulting from its use.